EN - Instruction Manual

Issue/Rev. 1.20 (09/03)
MN F16 002 EN ◄► DOK-415

Cross Over Prevention

NoMix

FMC Technologies

Sening® is a registered trademark of FMC Technologies

Important:

All information and technical specifications in this documentation have been carefully checked and compiled by the author. However, we cannot completely exclude the possibility of errors. ***F.A.Sening GmbH*** is always grateful to be informed of any errors.

Contents

1 General....8
1.1 How to Find Information in the Manual....8
2 General description of the NoMix 2000 system....9
2.1 Main functions....9
2.1.1 Cross Over Prevention....9
2.1.2 Sealed Parcel Delivery (SPD) functionality....10
2.1.3 Vapour recovery hose monitoring....10
3 NoMix 2000 system components....11
3.1 Electronic components....11
3.1.1 Main Unit (NM2MAIN)....11
3.1.2 Display interface (NM2DISPLAY)....12
3.1.2.1 Second display interface....13
3.1.3 NoMix 2000 MainUnit / Display (NM2MAINDISP)....14
3.1.4 Wetleg sensor interface (NM2WET)....15
3.1.5 TAG interface (NM2TAG)....16
3.1.6 I/O interface....16
3.1.7 SPD sensor interface (MSSPD)....18
3.1.8 Printer (DR-295 / DR-298)....19
3.1.8.1 Printer configuration DR-295....20
3.1.8.2 Printer configuration DR-298....20
3.1.8.3 Replacing ribbon....21
3.1.9 Fuse junction box....22
3.1.10 Junction box for extending cables....22
3.2 Optional extensions....22
3.2.1 EMIS interface (CS-GW-EMIS)....22
4 Tank truck types....23
4.1 Tank trucks with direct discharge....23
4.1.1 Solenoid valve control....23
5 Installation....24
5.1 General....24
5.1.1 Preventive measures....24
5.1.1.1 For preventing accidents (caused by ignition of explosive mixtures):....24
5.1.1.2 To meet the requirements stipulated by standards:....24
5.1.1.3 To ensure trouble-free operation:....25
5.1.1.4 To make the job of the service personnel easier:....25
5.2 Vehicle wiring....26
5.3 Mechanical / pneumatic system....27
5.3.1 General Design....27
5.3.2 Installation of Individual Parts....27
5.3.2.1 Vapour Valves....28
5.3.2.1.1 Coaming Vent Valve....28
5.3.2.1.2 Compartment Vent Valve....29
5.3.2.2 Vapour Recovery Valve....30
5.3.2.3 Product Valves....31
5.3.2.3.1 Footvalve....31
5.3.2.3.2 Pneumatic API Coupling....31
5.3.2.4 Other Pneumatic Equipment....33
5.3.2.4.1 Emergency Button....33
5.3.2.4.2 Guard Bar Interlock....34
5.3.2.4.3 Pneumatic Filter and Lubricator....35

5.3.2.4.4 Wetleg sensor (NS-2E)....36
5.3.2.4.5 ESD resistors (ASS-GW-ESA, ASS-GW-ESU)....36
5.3.2.4.6 Man lid (optional)....36
5.3.2.4.7 Foot valve with pneumatically operated switch (foot valve with MSDSO)....36
5.3.2.5 Insulation of the API couplings....36
5.3.2.6 Insulation of the vapour recovery connection....37
5.3.2.7 Connection of the scan lines....37
5.3.2.8 Checking the discharge of electrostatic charges....37
5.3.2.9 Product and vapour recovery hoses.....37
5.3.3 Installation of Pneumatics....38
5.3.3.1 General Instructions....38
5.3.3.2 Circuit Diagrams....38
5.3.3.3 Operating Instructions....38
5.3.3.4 Components Profile....39
5.3.3.4.1 Coaming Vent Valve....39
5.3.3.4.2 Coaming Vent Valve Cover....40
5.3.3.4.3 Compartment Vent Valve....41
5.3.3.4.4 Flame Arrestor....42
5.3.3.4.5 Vapour Recovery Valve....43
5.3.3.4.6 Footvalve....44
5.3.3.4.7 Footvalve F1....45
5.3.3.4.8 Footvalve F2....46
5.3.3.4.9 Pneumatic API Coupling....47
5.3.3.4.10 Emergency Button....48
5.3.3.4.11 Master Guardbar Interlock....49
5.3.3.4.12 Auxiliary Guardbar Interlock....50
5.3.3.4.13 Pneumatic Filter and Lubricator....51
5.3.3.4.14 Gasket....52
5.4 Electronic system....54
5.4.1 Wiring of the battery and the internal CAN bus....54
5.4.2 Sensor & I/O connections....56
5.4.2.1 Wetleg sensor interface....56
5.4.2.2 TAG interface....56
5.4.2.3 I/O interface....56
5.4.2.4 SPD sensor interface....56
5.4.2.4.1 Second SPD sensor interface....57
5.4.3 Printer connection / (EMIS interface connection: optional)....58
5.4.3.1 Connection of a permanently installed printer....58
5.4.3.2 Temporary printer / laptop connection (optional)....58
5.4.3.3 EMIS interface connection (optional)....58

6 Start-up....59
6.1 Menu structure of the NoMix 2000 system....60
6.1.1 Main menu....60
6.1.1.1 SETUP menu....60
6.1.1.1.1 General....60
6.1.1.1.2 System setup....64
6.1.1.1.2.1 Serial number....65
6.1.1.1.2.2 Manual sealing permitted....65
6.1.1.1.2.3 Switching off breaks seal....65
6.1.1.1.2.4 Printer....65
6.1.1.1.2.5 Baud rate / no. of rows / no. of columns /....66
6.1.1.1.2.5.1 Identification necessary....66
6.1.1.1.2.6 Password....66
6.1.1.1.3 Components setup....67

6.1.1.1.4 Network setup....68
6.1.1.1.4.1 EMIS interface communication possible....69
6.1.1.1.4.2 EMIS node number....69
6.1.1.1.4.3 Save events....69
6.1.1.1.4.4 Events sent to:....69
6.1.1.1.4.5 Own node number....69
6.1.1.1.4.6 CAN bus connection required....69
6.1.1.1.5 Truck setup....70
6.1.1.1.5.1 Tank truck type....70
6.1.1.1.5.2 Pneumatically operated switch present....71
6.1.1.1.5.3 Hose supervision....71
6.1.1.1.5.4 DMS option installed....72
6.1.1.1.6 Product setup....72
6.1.1.1.6.1 Products used....73
6.1.1.1.6.2 Leaded products....74
6.1.1.1.6.3 Product names....75
6.1.1.1.6.4 Further product-specific parameters....76
6.1.1.1.7 Loading....76
6.1.1.1.7.1 Loading mode: tank truck / compartment....77
6.1.1.1.7.2 Number of simultaneous loading processes: 1 to 6....77
6.1.1.1.7.3 Manual input of loading plan permitted....78
6.1.1.1.7.4 Deactivation time for manual loading plan input: 10 to 120 minutes....78
6.1.1.1.7.5 Product code correction....78
6.1.1.1.7.6 Loading release valve ON: loading mode / connected....78
6.1.1.1.7.7 Loading release valve OFF: NoMix, loading, compartment fault....79
6.1.1.1.7.8 Automatic opening: yes / not f. man. load. plan ent. / no....79
6.1.1.1.7.9 Close compartment after loading: yes / no....79
6.1.1.1.7.10 Compartment loading....80
6.1.1.1.7.11 Compartment empty test....80
6.1.1.1.7.12 Leave compartment open after empty test....81
6.1.1.1.7.13 TAG switch-off time: 0 to 9 seconds.....82
6.1.1.1.7.14 Magnet code delay....82
6.1.1.1.7.15 Wetleg sensor switch-on time....82
6.1.1.1.7.16 Vapour recovery during loading....82
6.1.1.1.8 Discharge....83
6.1.1.1.8.1 Discharge mode....84
6.1.1.1.8.2 Delivery on loading side: yes / no....84
6.1.1.1.8.3 Number of simultaneous deliveries....84
6.1.1.1.8.4 Number of simultaneous A3 deliveries....84
6.1.1.1.8.5 Number of simultaneous A1 deliveries....84
6.1.1.1.8.6 Override mode....85
6.1.1.1.8.7 Disable override if HSV is detected: yes / no....85
6.1.1.1.8.8 Override measuring system with vapour recovery:....85
6.1.1.1.8.9 Number of simultaneous overrides....85
6.1.1.1.8.10 Override deactivation time: 10 to 120 min.....85
6.1.1.1.8.11 Override log info: standard / detailed....85
6.1.1.1.8.12 Simplified override menu....85
6.1.1.1.8.13 Wetleg sensor switch-off time: 0 to 60 seconds.....86
6.1.1.1.8.14 Products via measuring system 1 / measuring system 2....86
6.1.1.1.8.15 Vapour recovery during discharge....86
6.1.1.1.9 SPD sensor setup....87
6.1.1.1.10 Event setup....93
6.1.1.1.11 Display interface setup....93
6.1.1.2 Override....95
6.1.1.2.1 Entering an override....95

6.1.1.3 Manual input of loading plan 95
6.1.1.4 NoMix 2000 log book 96
6.1.1.5 Event log book 97
6.1.1.6 Date / time 97
6.1.1.7 Test menu 98
6.1.1.7.1 Main Unit Test 98
6.1.1.7.2 TAG test 99
6.1.1.7.3 Wetleg sensor test 101
6.1.1.7.4 I/O interface test 101
6.1.1.7.5 Keypad test 102
6.1.1.7.6 SPD sensor test 102
6.1.1.7.7 CAN bus test 103
6.1.1.8 Print Menu 104
6.1.1.8.1 Setup 104
6.1.1.8.2 Status 105
6.1.1.8.2.1 Status report before loading (Example) 105
6.1.1.8.2.2 Status report after loading / before discharge (Example) 106
6.1.1.8.2.3 Status report, other possible compartment status entries (Example) 107
6.1.1.8.3 Logbook 108
6.1.1.8.3.1 Logbook Printout (Example) 109
6.1.1.8.4 Events 110
6.1.1.8.4.1 Printout of Events (Example) 111
6.1.1.8.4.1.1 Discharge (Example) 111
6.1.1.8.4.1.2 Loading (Example) 113
6.1.1.8.4.2 Other Events 114
6.1.1.8.5 Reports (Worksheet) 115
6.1.1.8.5.1 Report of a Loading and Discharge (Example) 115
6.1.1.8.5.2 Additional Compartment States 117
6.1.1.8.5.3 Copy Report 117
6.1.1.8.5.4 Other Reports 117
6.1.1.8.6 Print data to Laptop 118

7 Checking the functionality 119
7.1 Test device: depot / petrol station simulation 119
7.1.1 Short description 119
7.1.2 Connections 119
7.2 System Test 120
7.2.1 Fault Finding (Pneumatic) 121
7.2.2 Fault Finding (Electronic) 123
7.2.2.1 NoMix 2000 fault 123
7.2.2.2 Operator error / information for users 125

8 Maintenance 127

9 Part numbers of the NoMix 2000 modules 128

10 Software replacement 130
10.1 Main Unit 130
10.2 Interface modules 130

11 Extract from ElexV (§12) (see also national standards) 131

12 Warranty and Service 132

13 Address and Contact 133

14 Setup: 6-compartment direct discharger truck 134

15 Appendix 136
15.1 Elementary / Block diagrams 136

15.2 Tender drawings 136
15.3 Electrical circuit diagrams 136
15.4 Electromechanical components 137
15.5 Pneumatic circuit diagrams truck with direct discharge 137
15.6 EC-Type Examination Certificate 137
15.7 EC Declaration of Conformity 137

1 General

1.1 How to Find Information in the Manual

To enable you to find the required information in this manual easily, we have come up with a few orientation aids to help you.

- Page numbering
- Pictograms
  The information in this manual varies from crucial, necessary precautions and standard tasks, to actual steps to take in handling and advice. To make it easier to distinguish information in context, it is indicated by corresponding pictograms before the text.
  These pictograms should not only draw attention to themselves, but also assist in finding the desired information quickly. For this reason each pictogram is symbolic of the textual content that follows it.
  The following pictograms are used in this manual:

Danger. Here: Danger of explosion from inflammable gases and fluids.

Risk of Malfunction. Actions that damage the equipment.

§ **Legal Advice**. Actions that bear legal consequences.

☞ **Step-by-Step Instruction.** Concrete work advice, e.g. “Please press <Enter>“

☺ **Feedback Positive**, e.g. “The main menu is now displayed“

☹ **Feedback Negative**, e.g. “Should an error message now be displayed...“

Background Information, Short Cut, e.g. “Further information available in Chapter XX“

2 General description of the NoMix 2000 system

The NoMix 2000 system deals with control and monitoring functions on tank trucks during delivery of mineral oil products. The petrol stations and depots served have to be equipped with TAGs.

The NoMix 2000 system has the following main functions:

- **Cross Over Prevention (COP)**
- **Sealed Parcel Delivery (SPD)**

Additionally, NoMix 2000 contains a monitoring function that is currently not yet required by law, i.e.

- **Vapour recovery hose monitoring**

In principle, the system is configured according to the elementary diagram shown in drawing no. E11.351489 and is assembled from different interface modules depending on the configuration level, with the NM2MAIN main unit forming the central control unit. The individual interface modules are connected with each other and with the main unit via an internal CAN bus system.

2.1 Main functions

2.1.1 Cross Over Prevention

The Cross Over Prevention function of NoMix 2000 is intended to prevent mixing of product grades both during loading of tank trucks in depots and during product delivery from tank trucks into petrol station tanks.

NoMix is particularly intended for tank trucks that are used for the simultaneous delivery of different products to petrol stations and are equipped with bottom loading systems.
During loading, NoMix stores the product grades that are loaded into the individual tank trucks compartments. To this end, the tank depot loading arms are equipped with a product code, realised through TAGs. The product code is transferred to NoMix 2000 when the loading arm is connected to the tank truck.

In order to avoid mixing of products caused by residues in the tank compartments, each compartment is equipped with a wetleg sensor (level sensor). NoMix permits only empty tank compartments to be filled or, if a compartment contains a residual quantity of product, only product with the same quality may be added.

During product delivery from the tank truck compartments into petrol station tanks that are equipped for the NoMix system (TAG installation), electronic identification generators (TAGs), in which the respective product grade of the particular petrol station tank is stored electronically, are supplied with a small intrinsically safe voltage via the conductive product or vapour recovery hoses (resistance less than 10 Ω).
Via the hoses, the TAG immediately starts transferring its information to the NoMix system installed on the tank truck. The system compares the product grade of the tank truck compartment to be emptied with the product grade of the petrol station tanks.

2.1.2 Sealed Parcel Delivery (SPD) functionality

The concept of SPD functionality (**S**ealed **P**arcel **D**elivery) describes the delivery of low-viscosity mineral oil volumes/quantities that have been measured with calibrated instruments in a secured and monitored way ("sealed parcels") via tank trucks to the customer.

- The tank compartments are electronically sealed after loading. The loaded quantities are listed in the shipping documents.
- The status of the tank compartment man lids and valves is continuously monitored, and each change is recorded in a log file.
- Even if the vehicle battery is switched off, the power supply of the SPD sensor interface is maintained through an internal battery, so that monitoring can continue.
- The status of all compartments can thus be monitored for up to 100 hours, even without supply from the vehicle battery.
- After loading and prior to delivery at the customer, a status report with details of the sealing state of the compartments can be printed out.
- Any manipulation or removal of product during delivery from the loading station to the customer can be detected by comparing the printouts.
- If the comparison of the printouts does not reveal any manipulation, i.e. if none of the seals was broken, the tank truck compartments are confirmed to contain the loaded quantities according to the shipping documents.
- After delivery, the system indicates whether the compartments have been emptied completely, i.e. whether or not the compartments contain residual product.
- Any manipulation of a sealed compartment is logged directly. The compartment is then deemed to be "unsealed".

2.1.3 Vapour recovery hose monitoring

As an additional monitoring function, the NoMix 2000 system also monitors the vapour recovery hose. This prevents larger quantities of gas from escaping in the following cases:

- the vapour recovery hose is not connected to the tank
- the vapour recovery hose is not connected to the tank truck
- the vapour recovery hose is torn off

In these cases, discharge from the tank truck cannot be started or is automatically interrupted within a maximum of 5 seconds.

3 NoMix 2000 system components

All NoMix 2000 system components with their associated part numbers are listed in Chapter 9. The main components are:

- Main Unit (part no. NM2MAIN)
- Display-Interface (part no. NM2DISPLAY)
- Wetleg sensor interface (part no. NM2WET)
- TAG interface (part no. NM2TAG)
- I/O interface (part no. NM2IO)
- SPD sensor interface (part no. MSSPD)
- Optional: trailer cable, printer, on-board computer, temporary connection to printer or OBC

> The Main Unit NM2MAIN and the Display Interface NM2DISPLAY can be replaced by Main Unit & Display part no. NM2MAINDISP e.g.

3.1 Electronic components

3.1.1 Main Unit (NM2MAIN)

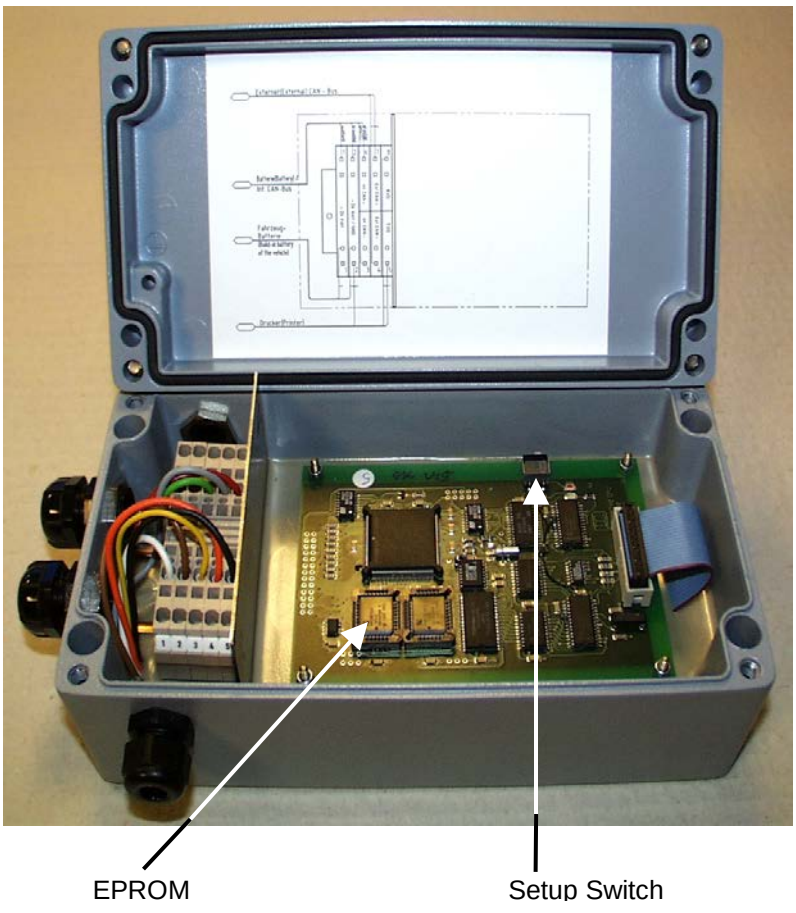

The main unit (part no. NM2MAIN) is the central control unit of the NoMix 2000 system. Via the internal CAN bus connection it receives/sends data from/to the interface modules such as display interface, wetleg sensor interface, TAG interface, I/O interface and SPD sensor interface. The main unit stores and evaluates the data. A so-called "life test" is carried out continuously between the main unit and all connected interface modules. This ensures that all interface modules function properly.
Internally stored data can be transmitted directly to a printer via the RS-232 printer interface (see also chapter 3.1.7).
A future version will allow data to be sent to the EMIS interface via the external CAN bus connection. From here, they can be transferred to an on-board computer system (OBCS) via an RS-232 interface (see also Chapter 3.2).

3.1.2 Display interface (NM2DISPLAY)

The display interface must be installed using PG screw joints that point to the right!

☞ The display interface is originally supplied with the label "MultiSeal". For use with NoMix 2000, the name must be changed from MultiSeal to NoMix 2000. This is done by pulling out the "name strip" from the slot, reversing it, pushing it back in again and fixing it with adhesive tape.

The keys have the following functions:

Key	Function
Function keys **<F1>**, **<F2>** and **<F3>**	The function keys will execute the function shown in the bottom row of the display.
<Stop> key	The **<Stop>** key enables all currently running discharge or loading processes to be stopped immediately. Menus can also be quit immediately.
<Menu> key	The menu control, e.g. for settings, execution of test, entering the loading plan, entering a override etc. is reached via the **<Menu>** key.
<Print> key	The print menu is reached via the **<Print>** key; Printing out of the setup, the log book, activity reports, status reports, event reports etc.
<Enter> key	The **<Enter>** key is used to confirm entries.
<Numeric keys> 0 to9	The **<numeric keys>** can be used to call up detailed information, start discharge and loading processes, and select submenus.
<Arrow keys> ← and →	Back / forward

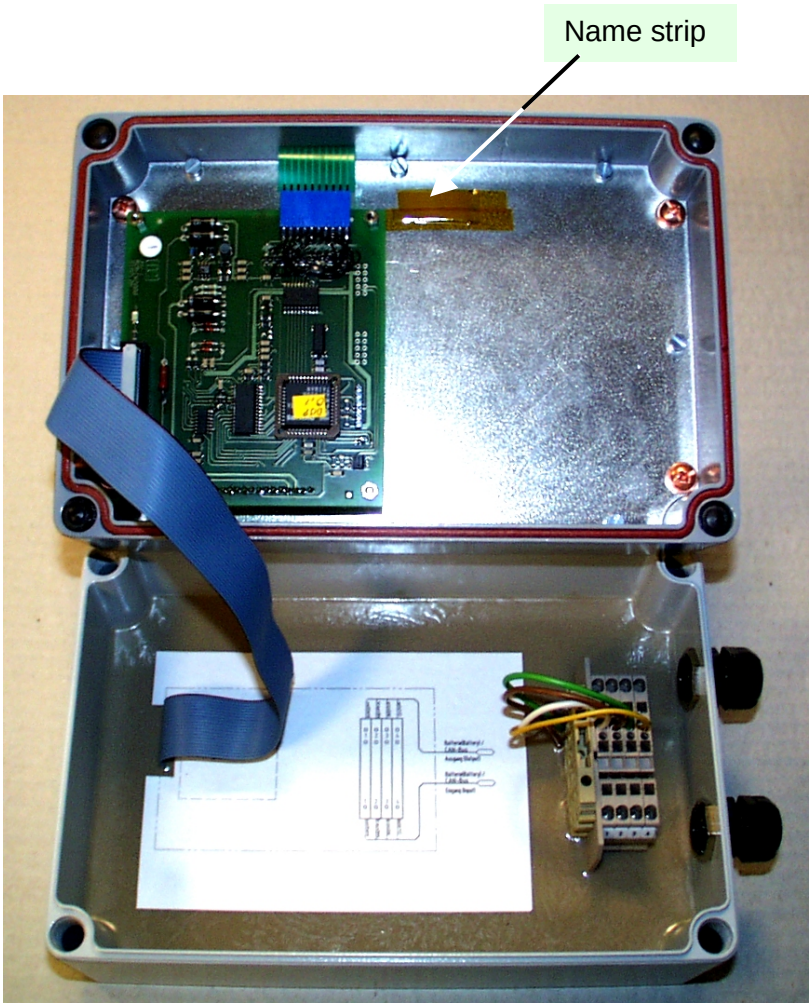

Like all other interface modules, the display interface (part no. NM2DISPLAY) is connected with the main unit via the internal CAN bus.

The NoMix 2000 system is operated via the keypad.

- Entering the SETUP (adaptation of the NoMix 2000 system to different tank trucks variants)
- Execution of tests during commissioning and troubleshooting
- Printing out of NoMix 2000 reports
- Printing out of the SETUP
- Starting and stopping of discharge and loading
- Display of detailed error messages

The NoMix 2000 display interface is equipped with an independent setup facility. A detailed description of the setup can be found in Chapter 6.1.1.1.11.

All display interface modules delivered after August 2003 are equipped with an automatic contrast adjust. That means the contrast must not be adjusted by hand when it becomes cold. Display interface CPU-boards, hardware version 1.00, are marked with a blue dot. New CPU-boards, hardware version 2.00, have no marking.

3.1.2.1 Second display interface

In the interest of user-friendliness, certain tank truck types may require the installation of a second display interface. The address (node number) of the second display interface must be set in the display setup according to Chapter 6.1.1.1.11.

3.1.3 NoMix 2000 MainUnit / Display (NM2MAINDISP)

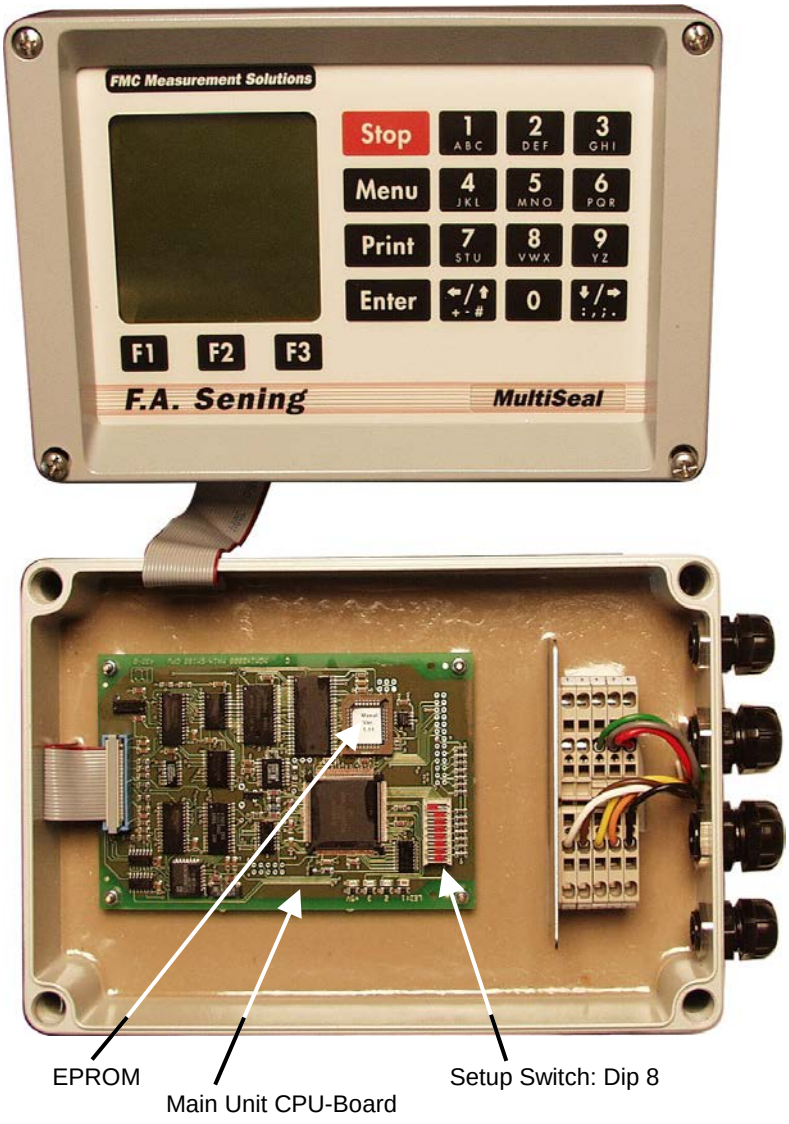

To save space and weight the NoMix 2000 Main Unit, part no. NM2MAIN, and the Display Interface, part no. NM2DISPLAY, are integrated in one box.

The CAN-Bus connection between Main Unit CPU-board and Display CPU-Board is done internally in the moulded common power supply.

At the same time also the Main Unit CPU-Board was changed to a new type. The main changes are:

- Bigger memory for the logbook
- An 8-pin dipswitch has been integrated. Now the setup switch is the dipswitch no. 8 (see also drawing no. 51.351675).
- 2 additional LED´s have been integrated (not relevant for NoMix 2000).

The wiring of Main Unit / Display has to be done according to drawing no. 51.351673. (See also the MultiSeal / NoMix 2000 system wiring diagram drawing no. 61.351676).

3.1.4 Wetleg sensor interface (NM2WET)

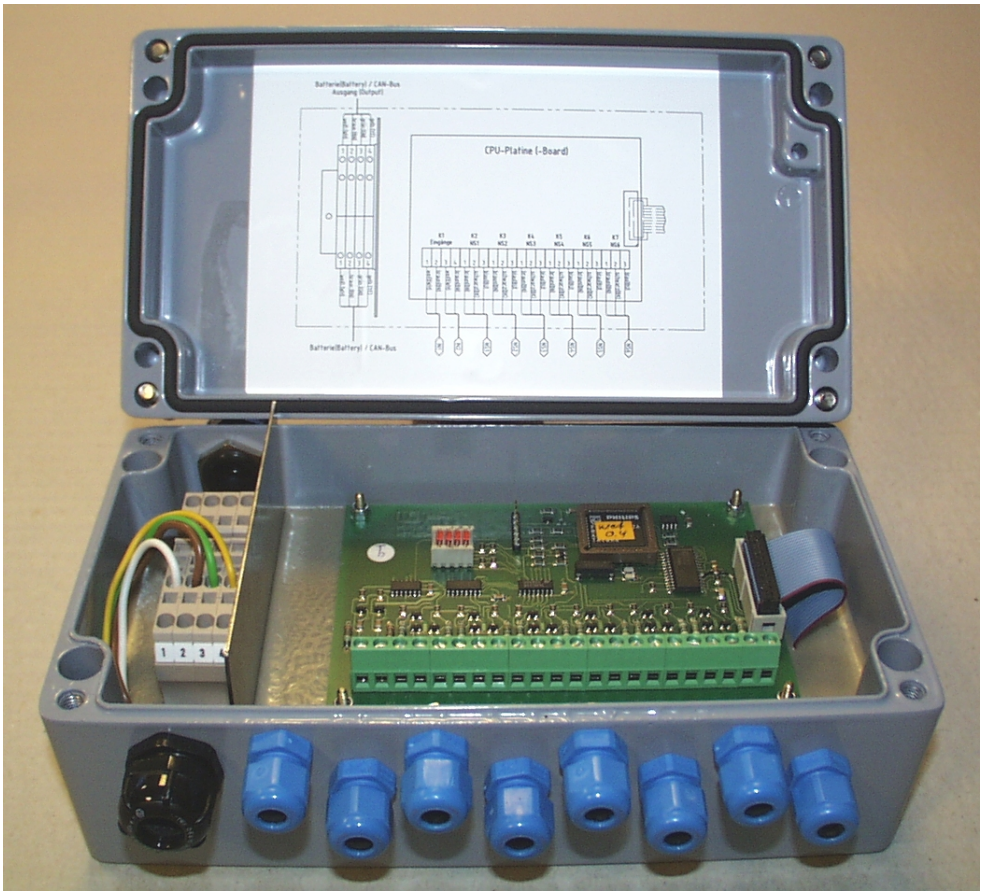

Via wetleg sensors (part no. NS-2E) installed in the pipe system of the individual tank truck compartments, the wetleg sensor interface (part no. NM2WET) monitors the fill level of the compartments. The compartment state can either be empty or not empty/filled. If a compartment is not empty, no statement about the residual volume of the product can be made. Short circuits and disruptions, such as unplugging of the connectors, leads to unsealing of the tank truck compartment. The states of the wetleg sensors or the state changes are transmitted to the main unit for further processing via the internal CAN bus.
Apart from the wetleg sensor connections, the wetleg sensor interface contains two intrinsically safe inputs. The pneumatic main pressure switch, part no. NM2DSS, is connected to the first input. Via the compressed air switch, the system detects whether the supply of the pneumatic system with compressed air is ensured. This information is also transmitted to the main unit via the internal CAN bus.

3.1.5 TAG interface (NM2TAG)

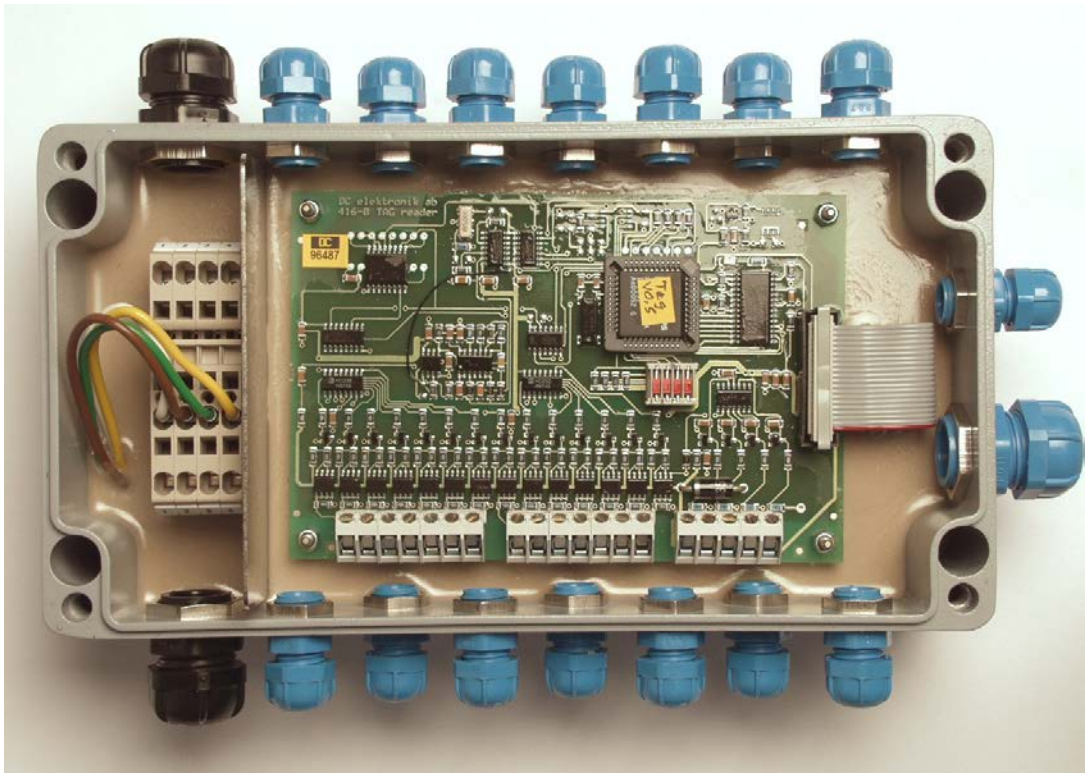

The TAG interface (part no. NM2TAG) is used for reading and evaluating the TAG signals. To this end, the TAGs are supplied with a small intrinsically safe voltage via the product and vapour recovery hoses.

The TAG scan channels are distributed as follows:

- TAG scan 1: Tank truck with direct discharge, compartment 1
- TAG scan 2: Tank truck with direct discharge, compartment 2
- TAG scan 3: Tank truck with direct discharge, compartment 3
- TAG scan 4: Tank truck with direct discharge, compartment 4
- TAG scan 5: Tank truck with direct discharge, compartment 5
- TAG scan 6: Tank truck with direct discharge, compartment 6

- TAG scan 7: (optional for tank truck measuring systems, measuring system 1)
- TAG scan 8: (optional for tank truck measuring systems, measuring system 2)

- TAG scan 9: (optional vapour recovery connection)
- TAG scan 10: (optional vapour recovery connection)
- TAG scan 11: (optional vapour recovery connection)
- TAG scan 12: (optional vapour recovery connection)
- TAG scan 13: 3" / 4" common vapour recovery connection

- TAG scan 14: (optional for extensions)

3.1.6 I/O interface

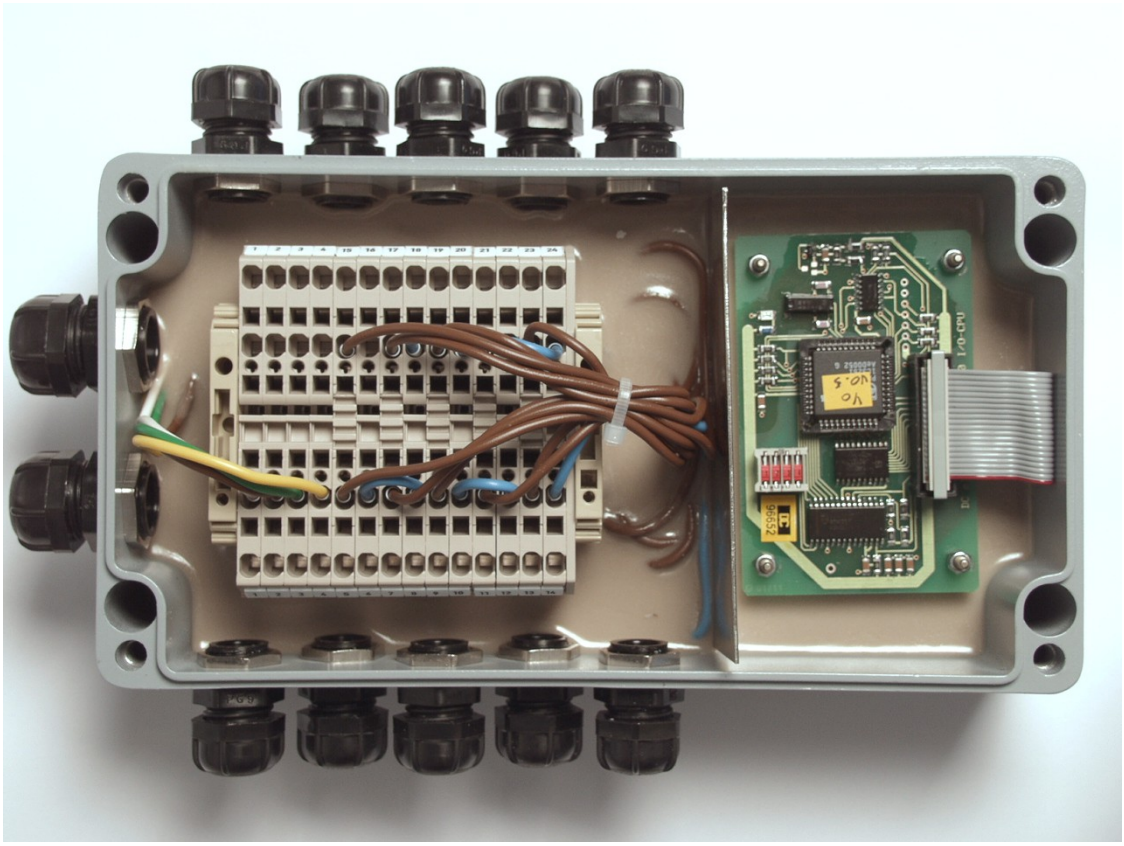

The I/O interface (output driver interface) is used for controlling solenoid valves that start or stop the discharge/loading process pneumatically. The output driver interface receives the information for controlling a solenoid valve from the main unit.
The output driver interface is able to control 8 solenoid valves. 6 solenoid valves (MV1 to MV6) are assigned to the tank truck compartments. They are used to start or stop product delivery. The two remaining solenoid valves (MV7 and MV8) are used for the switchover between loading and discharge (loading release valve and delivery release valve). (See also Chapter 4.1.1).
Additionally, two non-intrinsically safe inputs are integrated in the I/O interface (optional).

3.1.7 SPD sensor interface (MSSPD)

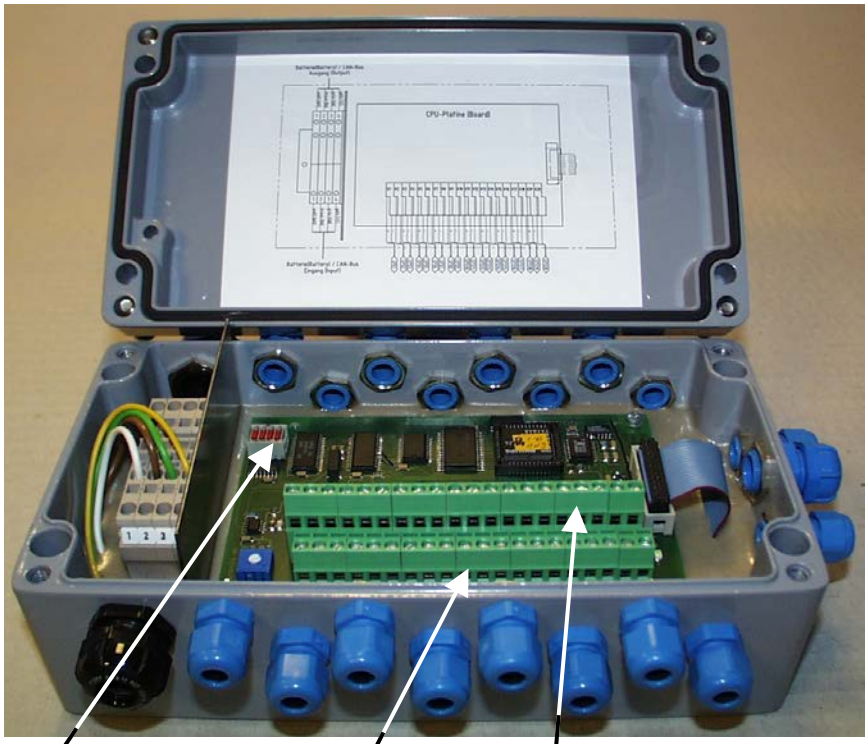

Via the connected SPD sensors, the SPD sensor interface is used to monitor the openings through which product can be discharged, as required. The following sensors are installed:

- Inductive proximity sensors (API coupling type VKAP100-I2 or VKVP-I, man lid sensors optional)
- Foot valve sensors (pneumatically operated switches MSDSO)

The SPD sensor interface also has an internal built-in battery, which continues to supply the SPD sensor interface in random time intervals if the NoMix 2000 system is temporarily disconnected from the vehicle battery. The sensor states are then held in a buffer within the interface. Once the NoMix 2000 system is reconnected to the vehicle battery, the sensor information is transferred from the buffer to the main unit for further processing.

Attention: On delivery, the internal batteries are switched off via the dip switch on the CPU board (Dip 4 = OFF), in order to avoid unnecessary discharging the internal batteries during storing and commissioning. Dip switch 4 should only switched to the "ON" position immediately prior to start-up. This switches on the supply from the internal batteries (see also drawing no. E51.351372)!

Attention: If the processor, into which the software is integrated, has to be replaced, the supply from the internal batteries must be switched off, i.e. DIP switch 4 must be switched to the "OFF" position (see also drawing no. E51.351372)!

In the future the SPD sensor interface part no. MSSPD will be replaced by the SPD Namur sensor Interface part no. MSSPD-N. Externally there is no difference between the interface modules. The change is done on the CPU board. At MSSPD-N the sensor evaluation is done digitally and in combination with the NoMix main unit software version ≥ 1.40 three different analogue switch levels can be adjusted (see also SPD sensor setup in chapter 6.1.1.1.9).

3.1.8 Printer (DR-295 / DR-298)

NOTE: The NoMix 2000 system is optionally supplied with a printer, model DR-295 or DR-298. Printer operation is described below. Printer-specific special features are described separately.

☞ Switch on the printer via the switch on the left-hand side of the printer.

☺ The printer is operational if the **POWER** lamp is lit.

Paper can only be inserted if the **PAPER OUT** and **RELEASE** lamps are on.

- **PAPER OUT** comes on if there is no paper in the printing area of the printhead.
- The **RELEASE** lamp indicates that the printhead has been lifted and the paper has been released.

☞ Press the **RELEASE** key to lift the printhead.

☺ The **RELEASE** lamp will come on, indicating that the paper has been released from the printhead and can be inserted or removed.

☞ Feed the paper into the printer from the front, along the guide edge on the right hand side and up to the end stop.

☺ The **PAPER OUT** lamp will go out.

☞ DR-295: Press the **FORWARD** key.
DR-298: The paper is automatically pulled in after no more than 5 seconds.

☺ The printhead is lowered, thus holding the paper in place. The **RELEASE** lamp goes out, and the printer is ready to print.

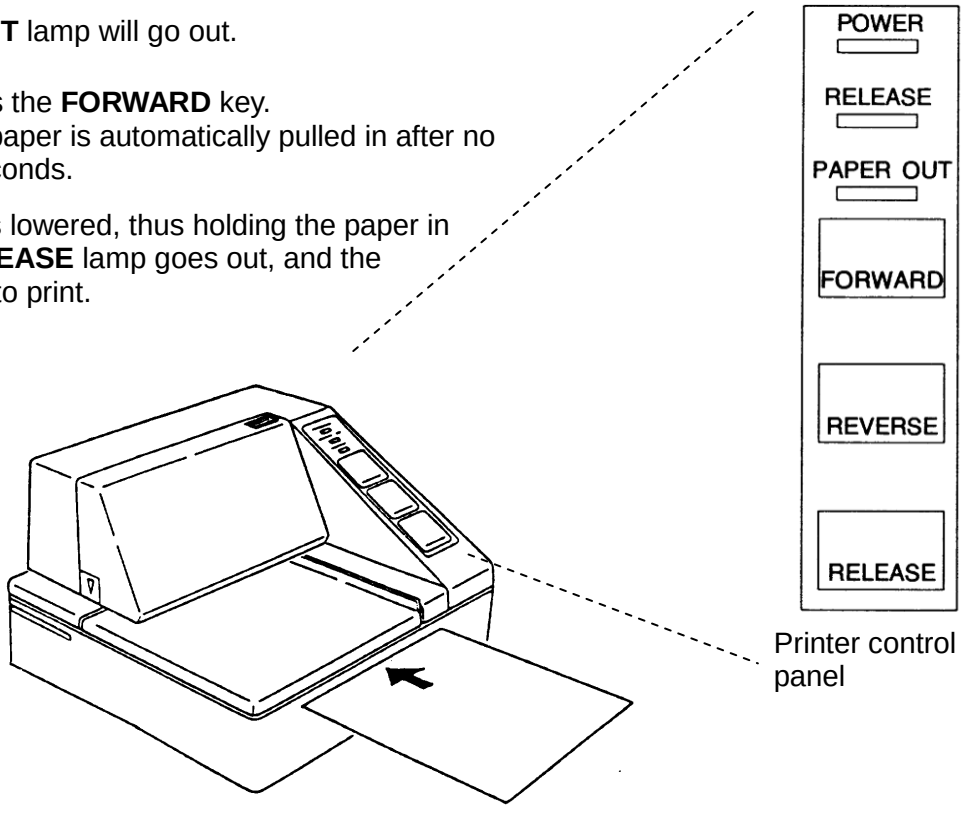

Inserting paper into the printer

Do not use paper with perforations along the edges. The printer would interpret the perforation as "paper end", and the printout would be interrupted.

3.1.8.1 Printer configuration DR-295

☞ The following factory settings should be checked on the DR-295 printer:

Switch	Position	Function
SW-1	ON	ignore transmission faults
SW-2	OFF	Input buffer, 512 bytes
SW-3	ON	Handshake XON/XOFF
SW-4	OFF	8 bits
SW-5	OFF	no parity
SW-6	ON	
SW-7	OFF	9600 baud
SW-8	OFF	
SW-9	OFF	pin6 reset deactivated
SW-10	ON	pin 25 reset deactivated

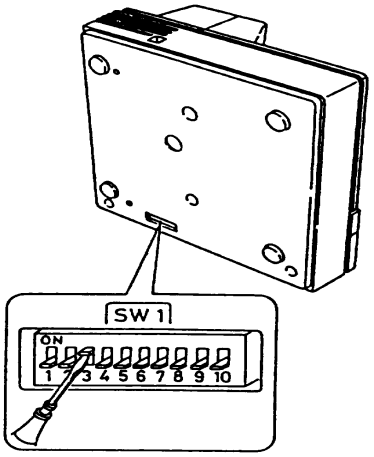

3.1.8.2 Printer configuration DR-298

The switches that determine the operating mode of the DR-298 are located in the interior of the unit (see manual).

☞ The following factory settings should be checked on the DR-298 printer:

Switch	Position	Function
SW-1	ON	9600 baud
SW-2	ON	
SW-3	ON	8 bits
SW-4	ON	no parity
SW-5	ON	
SW-6	OFF	Handshake XON/XOFF
SW-7	ON	printer mode ESC/POS (295)
SW-8	OFF	
SW-9	OFF*	pin6 reset deactivated
SW-10	OFF*	pin 25 reset deactivated

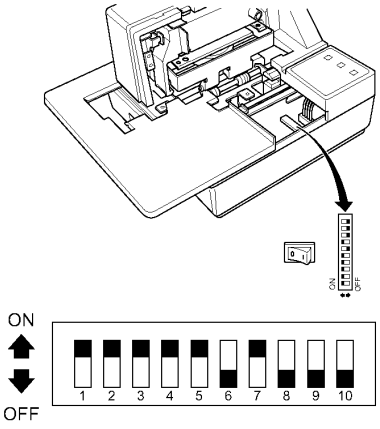

* switch setting arbitrary

3.1.8.3 Replacing ribbon

☞ Remove the cover.

✍ The cover has a grip area in the upper right corner and an arrow on the lower left rear corner. The cover can easily be removed by pulling carefully.

- Behind the cover is the black cartridge with the printer ribbon.
- For easy removal of the ribbon cartridge, the printer should be in **RELEASE** and **PAPER OUT** state.
- The release state is indicated via the **RELEASE** lamp.

☞ Press the RELEASE key, if the lamp is not lit.

Now pull the cartridge slightly at the grip area until it disengages.
Carefully move the cartridge towards the front, so that the ribbon can be pulled out under the transport rollers.

☺ The new ribbon cartridge can now be inserted.

☞ Prior to inserting it, tension the ink ribbon slightly with the knurling wheel on the left (DR-295) or right (DR-298) side of the cartridge in the direction of the arrow.

During inserting, the ink ribbon must be pushed underneath the pressure rollers.
Press the cartridge until the pins at the rear engage in the printer.
After it has been inserted, tension the ribbon once again with the knurling wheel.
Replace the cover.

✍ The ribbon cartridge can be ordered from F.A. Sening:
DR-295: Order no. **7100031**
DR-298: Order no. **7100157**

3.1.9 Fuse junction box

Since the NoMix 2000 & SPD system is supplied directly from the battery, an explosion-protected fuse must be installed near the vehicle battery. This is integrated in the fuse junction box, part no. MSKKFUSE. (see drawing no. E51.351418 and E51.351419).

3.1.10 Junction box for extending cables

A junction box, part no. CS-KA-EXT, is used if local conditions require sensor cables to be extended, e.g. the sensor of the API coupling (see drawing no. E51.351499).

3.2 Optional extensions

3.2.1 EMIS interface (CS-GW-EMIS)

The EMIS interface is used to connect the NoMix 2000 system with external electronic systems, for example an on-board computer (OBC). It is connected with the external CAN bus of the NoMix 2000 system. All relevant NoMix 2000 data are transferred from the main unit to the EMIS interface. The on-board computer (OBC) is connected with the EMIS interface via an RS232 interface. The installation of the EMIS interface is described in the workshop and installation manual DOK-418, DOK-432.

4 Tank truck types

The NoMix 2000 software currently only supports tank trucks with direct discharge and with a maximum of 6 compartments.

4.1 Tank trucks with direct discharge

In tank trucks with direct discharge, each compartment has a separate outlet:

- Loading and discharge are done via API couplings

Each isolated API coupling is connected with a direct discharge TAG scan line - TAG scan 1 (compartment 1) to TAG scan 6 (compartment 6). The connection of the TAG scan lines is shown on drawing no. E51.250226.

4.1.1 Solenoid valve control

Only one output driver interface is required for a direct discharge tank truck. The solenoid valves are assigned to the individual compartments / functions as follows:

- solenoid valve 1MV1: compartment 1, acts on the foot valve during loading, acts on the foot valve and the pneumatically driven API coupling during discharge.
- solenoid valve 1MV2: compartment 2, acts on the foot valve during loading, acts on the foot valve and the pneumatically driven API coupling during discharge.
- solenoid valve 1MV3: compartment 3, acts on the foot valve during loading, acts on the foot valve and the pneumatically driven API coupling during discharge.
- solenoid valve 1MV4: compartment 4, acts on the foot valve during loading, acts on the foot valve and the pneumatically driven API coupling during discharge.
- solenoid valve 1MV5: compartment 5, acts on the foot valve during loading, acts on the foot valve and the pneumatically driven API coupling during discharge.
- solenoid valve 1MV6: compartment 6, acts on the foot valve during loading, acts on the foot valve and the pneumatically driven API coupling during discharge.
- solenoid valve 1MV7: loading release solenoid valve
- solenoid valve 1MV8: discharge release solenoid valve

5 Installation

5.1 General

§ Only qualified installers may install the NoMix 2000 system on tank trucks.
[Qualified installers are defined as companies according to TRbF 180 Chapter no. 1.7.]
(See also national standards / requirements).
The qualified installer will install and check the complete system according to the criteria listed in the operating and installation instructions. Proper installation of the NoMix 2000 system must be confirmed in writing.

5.1.1 Preventive measures

5.1.1.1 For preventing accidents (caused by ignition of explosive mixtures):

Regulations for explosion-proof installation (e.g. EN 60079-14; VDE 0165) must be adhered to! (See also national Standards).
All components are explosion-proof electrical devices that have been safety-checked and certified.

*** No intervention, either mechanical or electrical, is permitted ***

R I S K O F E X P L O S I O N

- The information provided on Ex-labels must be observed.
- In case of a fault, the complete module must be replaced.
- No additional components must be added to the housings or junction boxes (e.g. additional terminals), since this would void the device approval.
- Failure to observe these instructions will obviously lead to a loss of any right to claim under warranty.
- If cable entries have to be replaced on housings, only ATEX-approved types must be used.
- **Unused cable entries must be sealed with "EEx e" approved blind plugs.**
- Ex-cable must be used for non-intrinsically safe cabling.
- The printer is only suitable for operation outside Ex-areas. To protect it from the effects of the weather, it should preferably be installed in the driver's cabin.

5.1.1.2 To meet the requirements stipulated by standards:

- The wiring must be carried out according to the wiring diagrams supplied. The colours of the wires correspond to DIN 47100. The specified wire colours **must be** followed! Only the supplied cable, part no.: NM2KABEL, may be used for the wiring of the battery supply and of the internal CAN bus.
- The electrical installation must be carried out according to EN 60079-14; VDE 0165. (See also national standards / requirements).
- The manufacturer's EMC declaration of conformity is only valid if the system has been installed exactly according to the information provided by the manufacturer.

5.1.1.3 To ensure trouble-free operation:

- During welding work at the vehicle, the power supply (plus 24 Volts and 0 Volts) to all electronic components must be interrupted.
- All electronic devices and junction boxes must be mounted firmly and protected from vibration within a cabinet. If a module is intended for installation outside the cabinet, it is explicitly stated.
- During the installation, a reliable electrical connection that complies with the relevant standards must be established between each metal housing and the vehicle chassis. Corrosion-resistant screws (V2A) with additional toothed disks must be used.
- If possible, the cable entries should always be installed facing sideways or downwards.
- **Unused cable entries should be sealed using "EEx e" blind plugs or sealing plugs, ensuring they are waterproof.**

  If wires have to be shortened, no cable residues must be allowed to fall into the open unit. This could lead to short circuits on the electronic board.

  When connecting the cables to the individual electronic devices, the fitter must ensure that he or she is not electrostatically charged, since electrostatic discharge could destroy the electronic components. The relevant guidelines for handling electronic products must therefore be observed (e.g. earthing strap, touching of the tank truck chassis prior to connecting the cables).

5.1.1.4 To make the job of the service personnel easier:

- Install electronics housings such that they are easily accessible.
- Cables without plug connectors may be shortened.
- Slightly lubricate the fixing bolts of the covers prior to installation (copper paste, graphite grease). This is intended to prevent the bolts from corroding and becoming stuck after prolonged operation.

5.2 Vehicle wiring

The NoMix 2000 system was designed for installation on a vehicle.

🛠 In order to ensure trouble-free operation, the guidelines described in the preceding chapters must be followed. Failure to follow the guidelines may lead to malfunction during operation.

§ In case of demonstrable failure to observe the guidelines or improper installation (violation of current regulations) we cannot accept responsibility for any malfunctions that may occur and for any subsequent claims.

- All cables used must be fuel-resistant. Ex-cable must be used for wiring in non-intrinsically safe areas. Only the supplied cable, part no. NM2Kabel, may be used for wiring the battery and the CAN bus.
- All cables must be installed (protected) in such a way that they are not damaged during operation (operator method of working).
  - A separate supply line should be used for the power supply.
  - A cable with ≥ 1.5mm² cross section should be used.
  - The cable does not have to be shielded.
  - Connect to the +24V voltage via a secured cable via a switch in the drivers cabin directly from the plus terminal of the battery.
  - Use an 4 A fuse (part no. MSKKFUSE) to protect the system.
  - Connect to the 0V voltage as closely to the ground terminal of the battery as possible.
  - From here, only the NoMix 2000 system should be supplied.

☞ The NoMix 2000 system is permanently supplied with power via the MSKKFUSE fuse junction box; optionally, a switch may be installed in the driver's cabin.

☞ Components of this system are installed on a semitrailer. Only use trailer cable available from F.A. Sening for the power supply and the communication line between the tractor unit and the semitrailer.

5.3 Mechanical / pneumatic system

5.3.1 General Design

The valves required for the loading and emptying of a semi-trailer truck are pneumatically opened and closed by spring force. The valves are controlled from The NoMix 2000 system which is mounted on the vehicle accessible for the driver. A master switch is integrated in the pneumatic system.

An API coupling is mounted on the vehicle for each compartment for the loading and delivery of the product, which is connected to the foot valve via a pipe. Each compartment has a non-pressure balanced foot valve on the underside.

In order for the gas to be returned (vapour recovery), a compartment vent valve is mounted on the top side in each compartment. All compartment vent valves are connected to the vehicle coaming. The vehicle coaming is connected, via a pipe, to the vapour recovery valve, which is close to the API coupling. All compartments are supplied with air during delivery via the coaming vent valve, if no vapour recovery hose is connected.

A guard bar is mounted in front of the API coupling and the vapour recovery valve. If this guard bar is opened for loading or for delivery, the vehicle can no longer be moved. There is an emergency button close to the API coupling, which can be used to close all compartments in an emergency.

5.3.2 Installation of Individual Parts

It is the responsibility of the tank truck builder to comply with the legal requirements in the installation of the NoMix 2000 system. If the legal requirements are changed, the tank truck owner is responsible for compliance with these requirements.

The valves, control equipment and accessories must be installed as described in the following sections. Cleanliness and suitable tools for the assembly are important.

All valves must be mounted liquid-tight and vapour-tight using the supplied gaskets. This tightness must be checked after assembly.

The electrical conductivity from the valve across the gaskets to the pipelines must be ensured. The conductivity must be checked after assembly using suitable measuring equipment. The legal requirements must be complied with (e.g. BS 5958 "Control of Undesirable Static Electricity").

All product and vapour hoses have to be conductive. They must have a hose resistance $\leq 10\ \Omega$ between the couplings.

5.3.2.1 Vapour Valves

5.3.2.1.1 Coaming Vent Valve

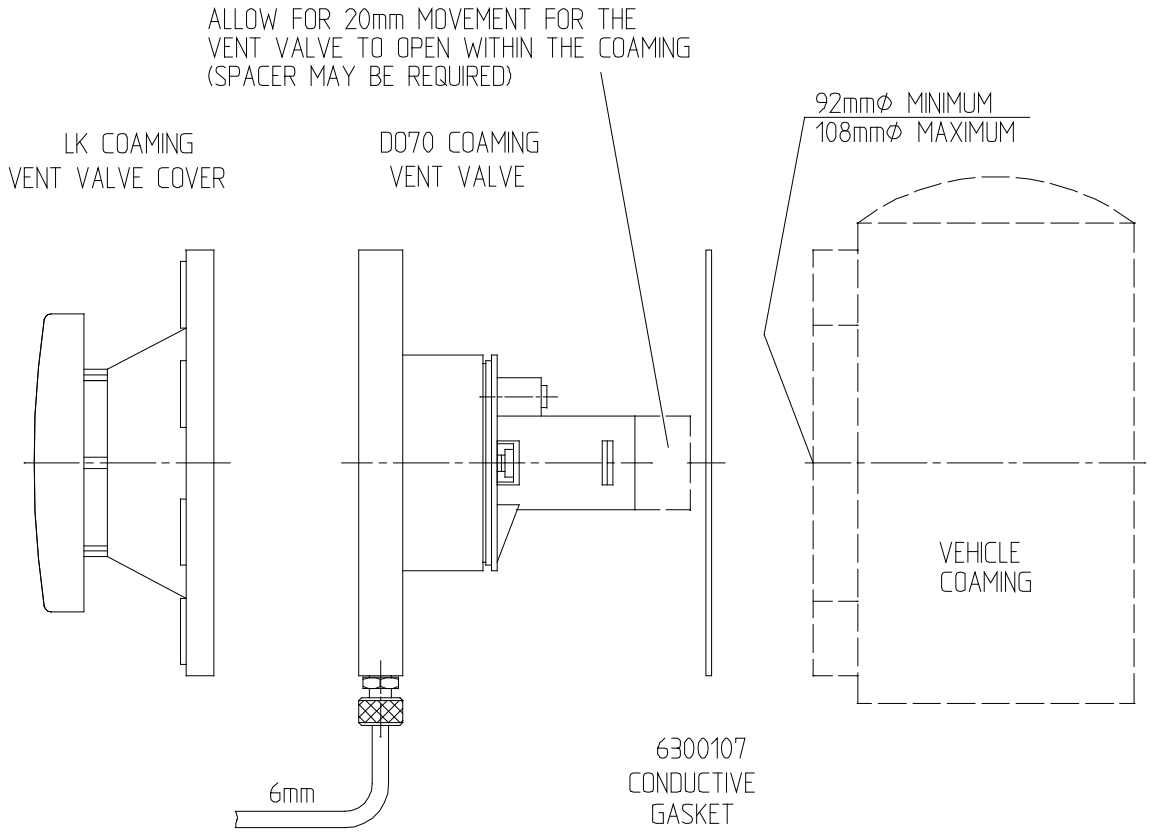

Figure 1 : Coaming Vent Valve

- The coaming vent valve is mounted directly into the coaming wall of the vehicle. A mating flange must be used for this (minimum diameter 92 mm / maximum diameter 108 mm).
- The valves (DO70, LK and gasket) must be mounted as shown in the figure.
- An additional movement clearance of 20 mm minimum is required for the coaming vent valve.
- The gasket used must be conductive.
- The air connection for 6 mm air hose must point downwards.
- The fixing screws must not be overtightened.

Test Procedure:

- The vapour tightness of the valve and the gasket must be checked up to opening of the relieve valve (approx. 80 mbar).
- The electrical conductivity from the vent valve across the gasket to the vehicle coaming must be checked.

The dimensions of the individual components are described in section 5.3.5.4.

5.3.2.1.2 Compartment Vent Valve

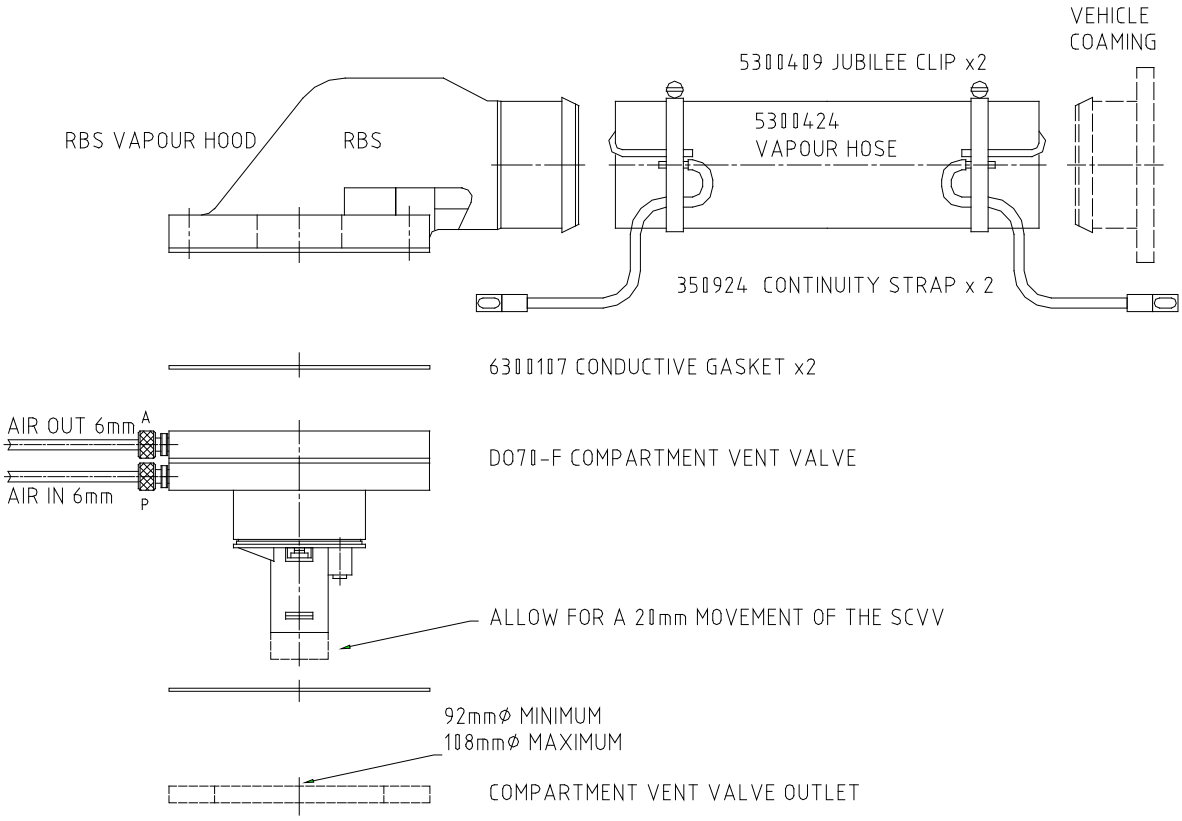

Figure 2 : Compartment Vent Valve

- The compartment vent valve is mounted from the top directly into the compartments of the vehicle. A mating flange must be used for this (minimum diameter 92 mm / maximum diameter 108 mm).
- The valves (DO70-F, RBS and gasket) must be mounted as shown in the figure.
- An additional movement clearance of 20 mm minimum is required for the compartment vent valve.
- The gasket used must be conductive.
- The air connections for the 6 mm air hose must be easily accessible.
- The fixing screws must not be overtightened.
- The continuity straps must be connected with the steel webbing of the hose and clamped under the jubilee clips.
- The vapour hose is installed with two jubilee clips
- Each of the cable lugs of the jubilee clips must be connected at a flange screw.
- The procedure described is repeated for all other compartments.

Test Procedure:

- The vapour tightness of the valves and the gasket must be checked up to the opening of the relief valve (approx. 80 mbar).
- The electrical conductivity from the vent valve across the gasket and the vapour hose to the vehicle coaming must be checked.

The dimensions of the individual components are described in section 5.3.5.4.

5.3.2.2 Vapour Recovery Valve

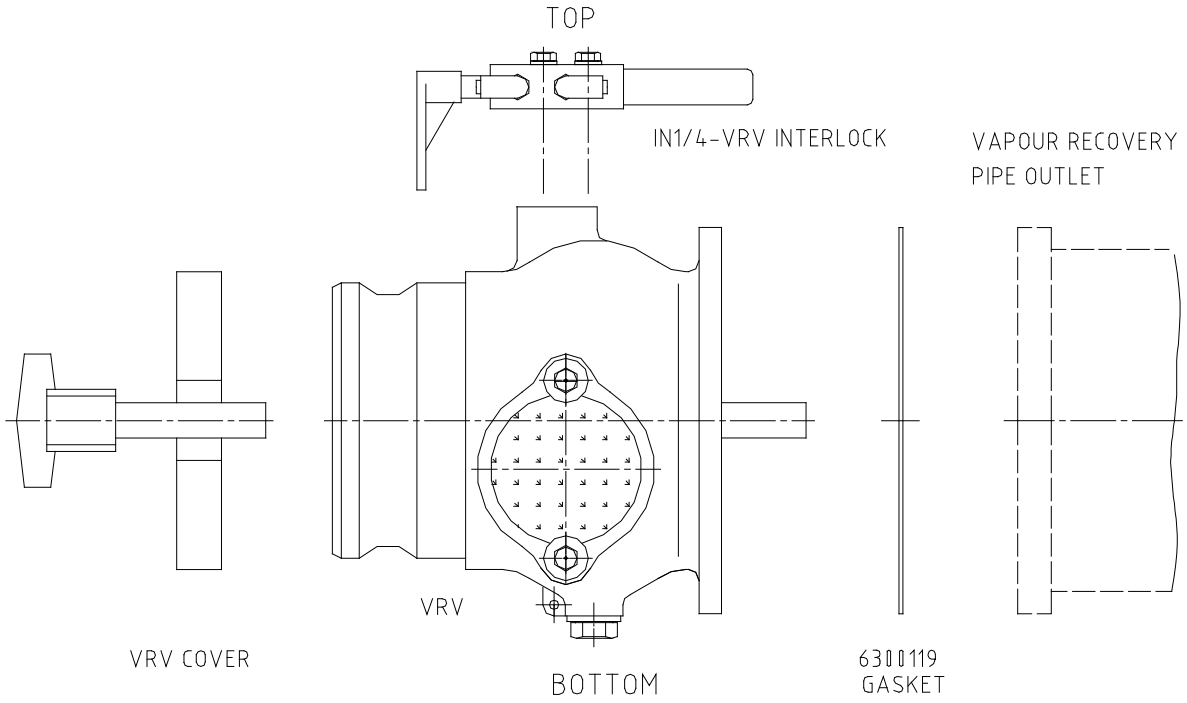

Figure 3 : Vapour Recovery Valve

For the NoMix 2000 functionality the vapour recovery valve has to be isolated mounted. The description for the isolation can be seen in chapter 5.3.2.5 and 5.2.3.6 and drawing no. E61.351490.

- The vapour recovery valve is mounted directly onto the recovery pipe of the vehicle. A mating flange must be used for this.
- The valve (VRV and gasket) must be mounted as shown in the figure.
- The fixing screws must not be overtightened.
- The fittings for the 6 mm air hoses must be mounted at the VRV interlock.

Test Procedure:

- The vapour tightness of the valve and the gasket must be checked.
- The discharge of electrostatic charges checking is described in chapter 5.3.2.8.

The dimensions of the individual components are described in section 5.3.5.4.

5.3.2.3 Product Valves

5.3.2.3.1 Footvalve

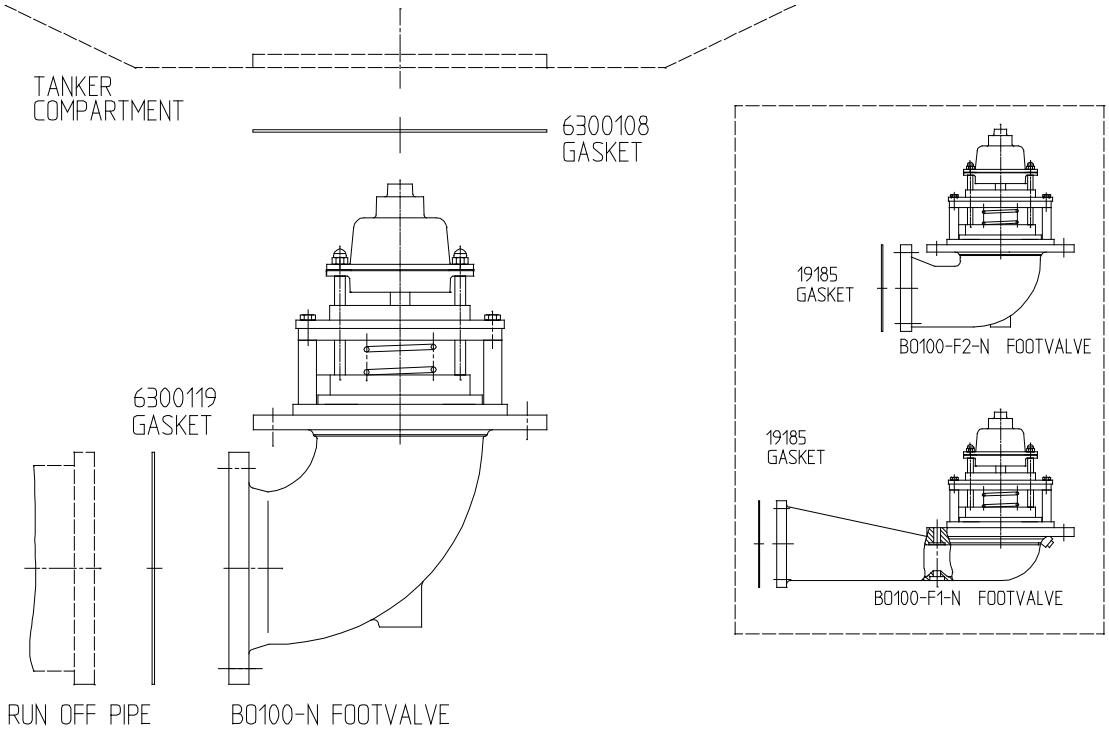

Figure 4 : Footvalves

- The various foot valves (BO100-N, BO100-F1-N or BO100-F2-N) are selected in accordance with the space available.
- The foot valve is mounted from below directly into the compartment of the vehicle. A mating flange must be used for this.
- The connection to the run off pipe is made via a second flange.
- The valve (BO100-N and gasket) must be mounted as shown in the figure.
- The gasket used should be conductive. If a non-conducive gasket is used, a conductive connection must be established via the flange screws.
- The fixing screws must not be overtightened.
- If the foot valve BO100-F1-N is mounted, the two M12 hex cap screws must be removed. After mounting the foot valves into the compartment, the two M12 hex cap screws must be replaced.
- The process described must be repeated for all other compartments.

Test Procedure:

- The liquid tightness of the valves and of the gaskets must be checked.
- The electrical conductivity from the run off pipe across the gaskets and the foot valve to the compartment must be checked.

The dimensions of the individual components are described in section 5.3.5.4.

5.3.2.3.2 Pneumatic API Coupling

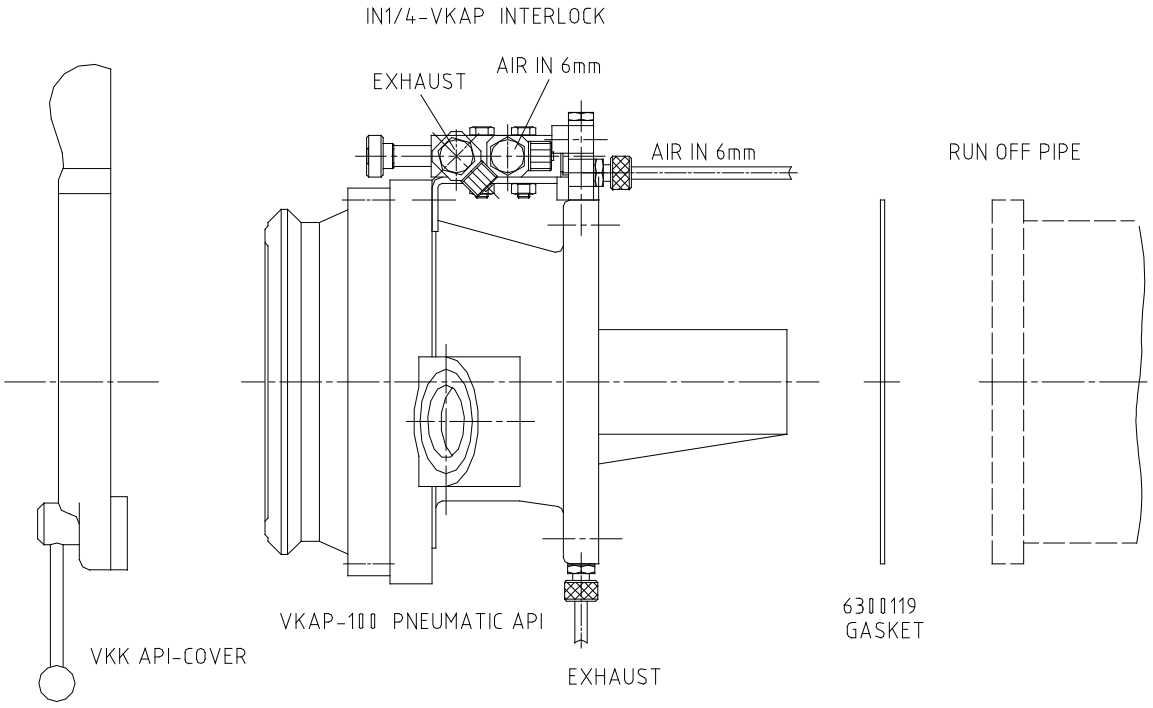

Figure 5 : Pneumatic API Coupling

For the NoMix 2000 functionality the API coupling has to be isolated mounted. The description for the isolation can be seen in chapter 5.3.2.5 and drawing no. E61.351490.

- The pneumatic API couplings must be mounted horizontally to the ground. Coupling of the loading arm is possible only in a horizontal position and for the visual indication to fulfill its function.
- The pneumatic API coupling is mounted directly on the run off pipe of the vehicle. A mating flange must be used for this.
- The interlock (IN1/4-VKAP) must be mounted with the existing cap screws as shown in the figure.
- The fixing screws must not be overtightened.
- It must be ensured that a sufficient work range is provided for the loading and delivery on each API coupling.
- The procedure described is repeated for all other compartments.

Test Procedure:

- The liquid tightness of the valve and of the gaskets must be checked.
- The discharge of electrostatic charges checking is described in chapter 5.3.2.8.

The dimensions of the individual components are described in section 5.3.5.4.

5.3.2.4 Other Pneumatic Equipment

5.3.2.4.1 Emergency Button

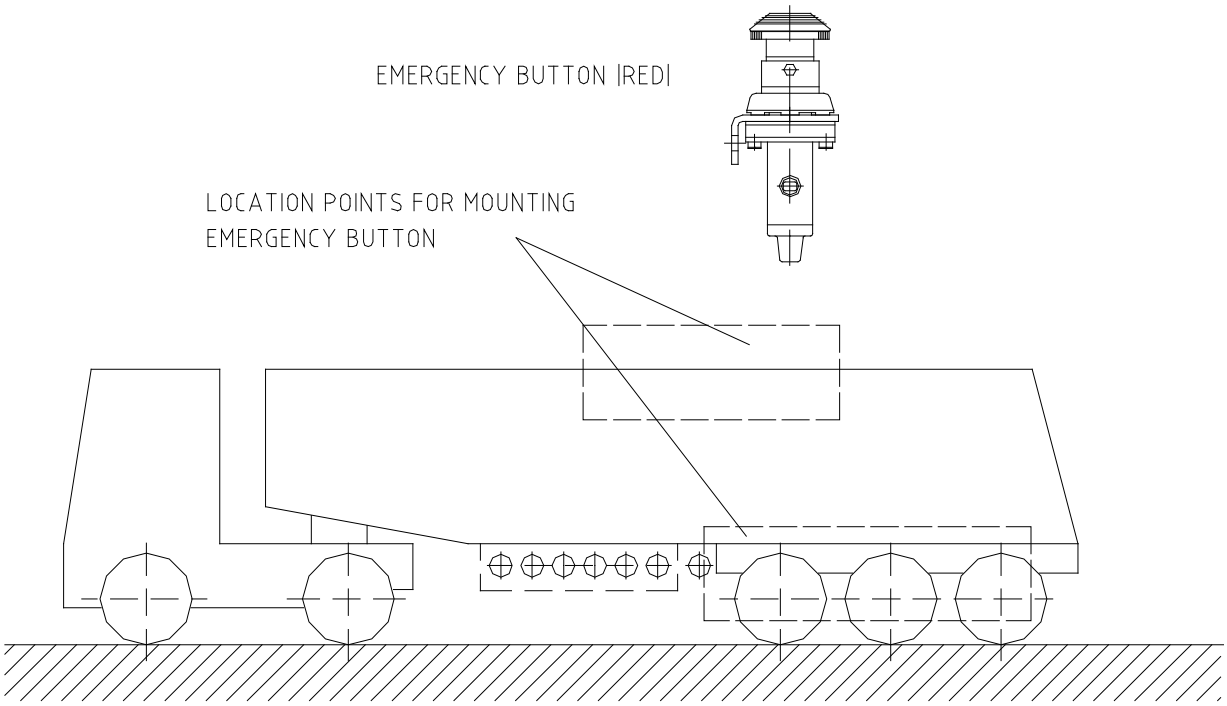

Figure 6 : Emergency Button

- The emergency buttons are mounted at accessible points on the vehicle. The end user should be consulted about the positioning.
- A maximum of two emergency buttons only may be mounted.
- The areas for the mounting of the emergency buttons are shown in the figure.
- A support plate with 28 mm diameter holes is required for the mounting.
- The emergency buttons should be clearly identified.

The dimensions of the individual components are described in section 5.3.5.4.

5.3.2.4.2 Guard Bar Interlock

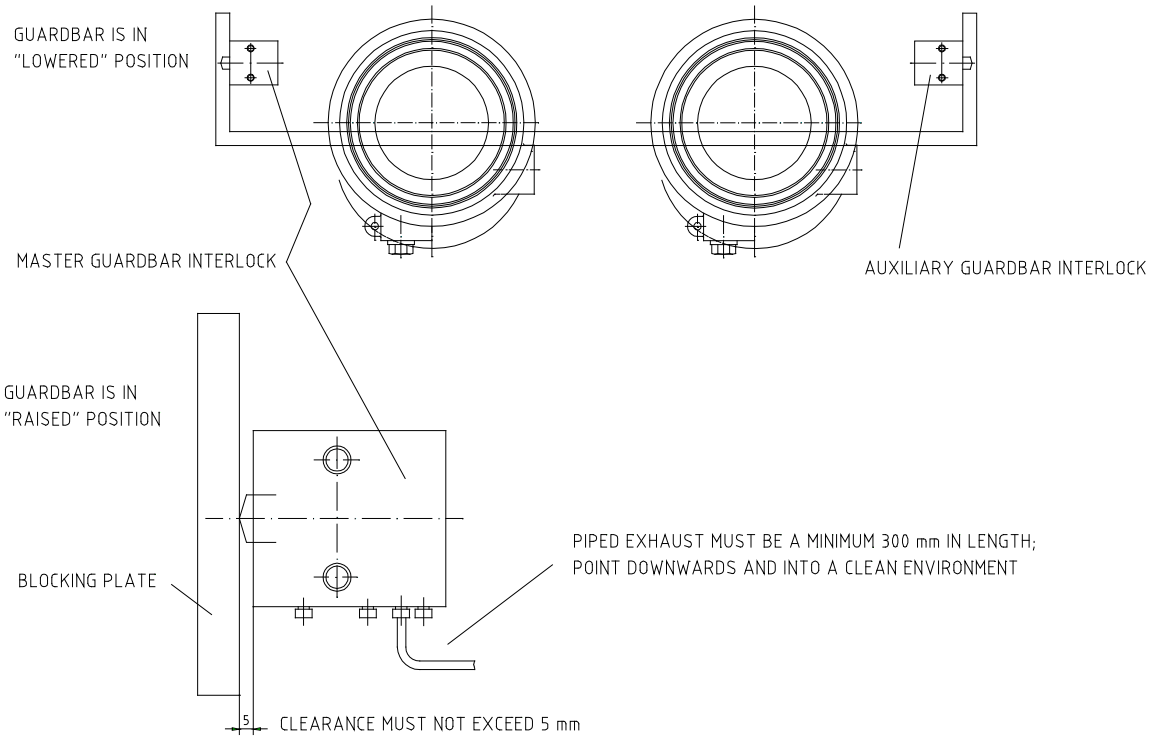

Figure 7 : Guard Bar Interlock

- The guard bar interlocks are mounted on the vehicle in such a way that the locking pins can easily engage into the locking holes.
- The guard bar interlocks are mounted with the two 8 mm diameter holes.
- The locking holes must have a diameter of 20 mm.
- A plate must be attached to the guard bar in such a manner that the guard bar interlocks cannot come out in the open position. The guard bar interlocks must only come out in the closed guard bar position.
- The distance between the plate and the guard bar housing should not be greater than 5 mm.
- A manual interlocking must be available for the guard bar in both end positions.
- These locks secure the guard bar during the travel and in the open condition.

Test Procedure:

- It must be checked with a closed guard bar whether the guard bar interlock pins engage satisfactorily into the locking holes and disengage again.
- It must be checked that the guard bar can only be opened if there is air at the guard bar interlock (red port).
- If the guard bar is open and there is no longer any air signal available, the guard bar pins must only come out 5 mm (blocking plate).

The dimensions of the individual components are described in section 5.3.54.

5.3.2.4.3 Pneumatic Filter and Lubricator

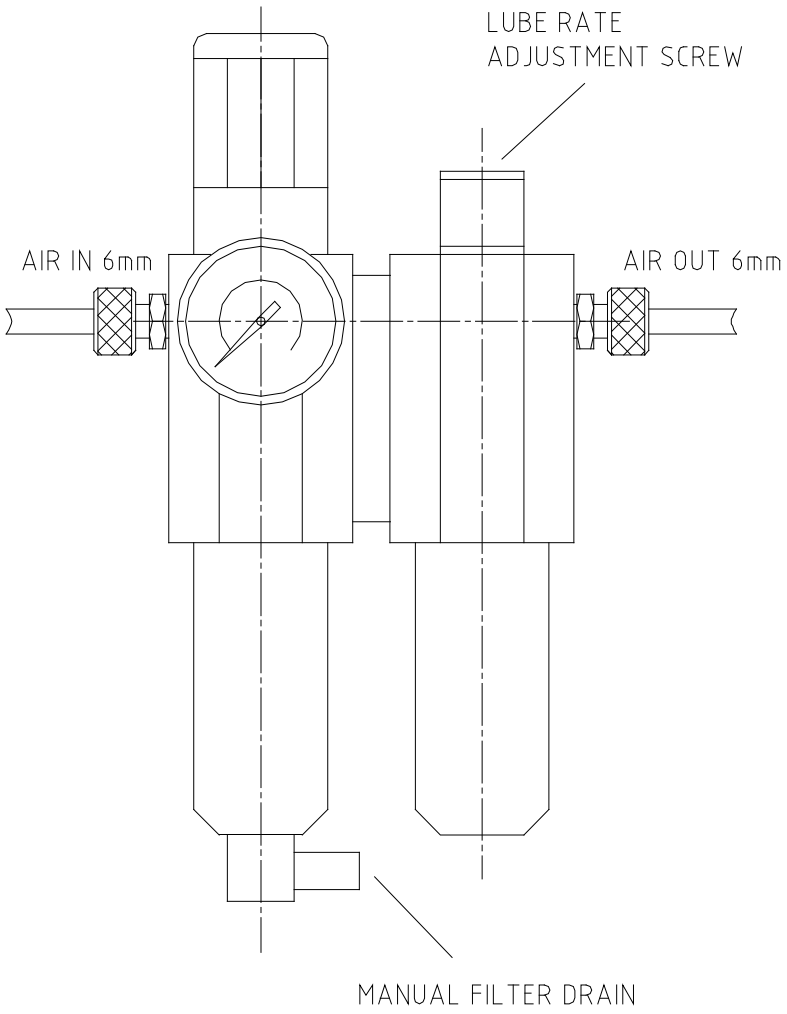

Figure 8 : Pneumatic Filter and Lubricator

- The pneumatic filter and lubricator must be mounted at a protected location on the vehicle. This is so that it cannot be damaged by impacts or wind during travelling.
- The pneumatic filter and the lubricator must be mounted as firmly as possible to the control cabinet and in a vertical position.
- The mounting must be done in such a way that the containers can be easily opened and the adjustment screws reached.
- The direction in which the air must flow through the filter and the lubricator is marked on the housing.
- When water is present in the filter bowl, squeeze the drain clamp to expel the water.
- The lubricator is filled to the maximum with the supplied lubricant.
- DO NOT USE WITH ANY OTHER TYPE OF LUBRICANT.
- In order to adjust the lubrication, a foot valve is opened and two to three drops of lubricant must be seen in the sight glass. The lube rate is adjusted using the adjustment screws.

The dimensions of the individual components are described in section 5.3.5.4.

5.3.2.4.4 Wetleg sensor (NS-2E)

The wetleg sensors, part no. NS-2E, should be installed with the aid of the welded nozzles at the lowest points of the piping that are still part of the respective compartments. This lowest point is located on the lower side of the loading coupling pipe or directly in the API coupling. The wetleg sensors must always be installed vertically from below.
The wetleg sensors are electrically connected with the terminals of the wetleg sensor interface. If necessary, the detection level of the NS-2E wetleg sensors can be adjusted with the aid of different intermediate sleeves (see drawing no. E51.350839). To increase the detection level, the sleeve has to be shortened with a lathe, or it can be left out completely.

(see drawing no. E51.350839).

5.3.2.4.5 ESD resistors (ASS-GW-ESA, ASS-GW-ESU)

The electrostatic discharge resistors are used for discharging electrostatic loads. They are connected according to drawing E61.351490 between the insulated product and vapour recovery connector and the tank truck chassis.

5.3.2.4.6 Man lid (optional)

Opening of the man lid can also be monitored via inductive proximity sensors (optional).

5.3.2.4.7 Foot valve with pneumatically operated switch (foot valve with MSDSO)

The foot valves are controlled (opened or closed) via pneumatically operated switches. The pneumatically operated switches are shown in drawing no. E61.351480 and are pneumatically connected at “T-connections” to the footvalves.

5.3.2.5 Insulation of the API couplings

The API couplings are insulated from the vehicle via plastic insulating bushes (part no. ASS-GW-I80G, ASS-GW-I100G).

The flange screws M12 must be replaced with M10 and flange screws M10 with M8. Furthermore, approx. 10mm longer screws should be used.
The flanges are installed with insulating bushes (see E61.351490). If necessary, the insulating bushes have to be shortened. The joint of the two insulating bushes must not be at the same level as the flange insulation, since this could lead to bridging of the insulation caused by ageing.

Due to the insulation, any **electrostatic charge** can no longer be discharged. For this reason, a resistor cable must be connected for each flange. The cable bridges the insulation between the discharge connector and the vehicle chassis (see drawing no. E61.351490 and E51.350228). The "small" cable socket **must** be installed on the side of the discharge connector.

Attention: The flange screws should be retightened after approx. 24 hours if necessary.

The chains for the covers must not be in electrical contact with the insulated discharge connector. They should be installed either directly at the vehicle chassis, or the metal chain must be replaced with a plastic string.

5.3.2.6 Insulation of the vapour recovery connection

The vapour recovery valve is also insulated via insulating bushes (see Chapter 5.3.2.5).

5.3.2.7 Connection of the scan lines

The TAG scan lines are connected to the insulated API coupling via the two-core control line with tin-coated conductors, part no. ASS-GS-K25M. The two wires are twisted around each other and equipped with a circular cable lug or a wire end sleeve (see drawing no. E51.250226).

The following parts are required for the connection:

- Circular cable lugs type RB 5 (nylon insulation, blue)
- Crimp tool for circular cable lugs and for wire end sleeves

5.3.2.8 Checking the discharge of electrostatic charges

Resistance measurement between each insulated connection piece and the vehicle chassis. Both at the product connector and at the vapour recovery connector, a resistance to the vehicle chassis of $\leq 0.5 * 10^6 \Omega$ (typically approx. 100 KΩ) must be present. Moisture (for example water in the tank truck compartment or saturated joint packings) can cause a reduction of the resistance. The resistance should always be $\geq$ 20 KΩ.

Attention: This measurement must only be carried out with the NoMix electronics switched off!

5.3.2.9 Product and vapour recovery hoses.

The product and vapour recovery hoses should have a resistance of < 10 Ω, measured between the two connector couplings. The internal wire filament is used for signal transmission and is connected electrically conductive with the two coupling pieces. The external wire filament is insulated from the internal wire filament within the connector couplings. For discharging of electrostatic charges, the insulation must be bridged at the two connector couplings with a resistance of $\leq$ 500 KΩ.

5.3.3 Installation of Pneumatics

5.3.3.1 General Instructions

- Only 6 mm air pipes may be used. Colour coded air pipes should be used as in the circuit diagrams.
- The air pipes must only be cut with the right air pipe cutter. Only this air pipe cutter cuts the air pipes cleanly and at an angle.
- The air hose must be held vertical to the cutter and it must be positioned in the provided notch of the cutter.
  IMPORTANT:
  Wrongly cut pneumatic pipes will lead to irreparable air leaks and possible system failure.
- The air pipes must be blown through prior to connection. Before making the final connection to the pipes, 2-3 cc of antifreeze should be injected into the 6 mm air pipe.
- The air pipes must be safely secured with cable bands. It must be ensured that the air pipes are not kinked and the pipes cannot be damaged on sharp edges.

Exhaust ports:

Short air pipes must be connected to the exhaust ports of all valves. These must point downwards and laid in a clean environment.
The air pipes of about 300 mm lengths must be connected to the exhaust ports of the emergency buttons, of the top operator buttons, of the vapour recovery interlock and to the master guard bar interlock.

Important:

Only the valves provided by F.A. Sening may be connected to the NoMix 2000 system. No additional equipment may be supplied with the air of the NoMix 2000 system.

5.3.3.2 Circuit Diagrams

See circuit diagrams in the appendix

5.3.3.3 Operating Instructions

See Driver Description DOK-440E and Driver Short Description DOK-441E.

5.3.3.4 Components Profile

5.3.3.4.1 Coaming Vent Valve

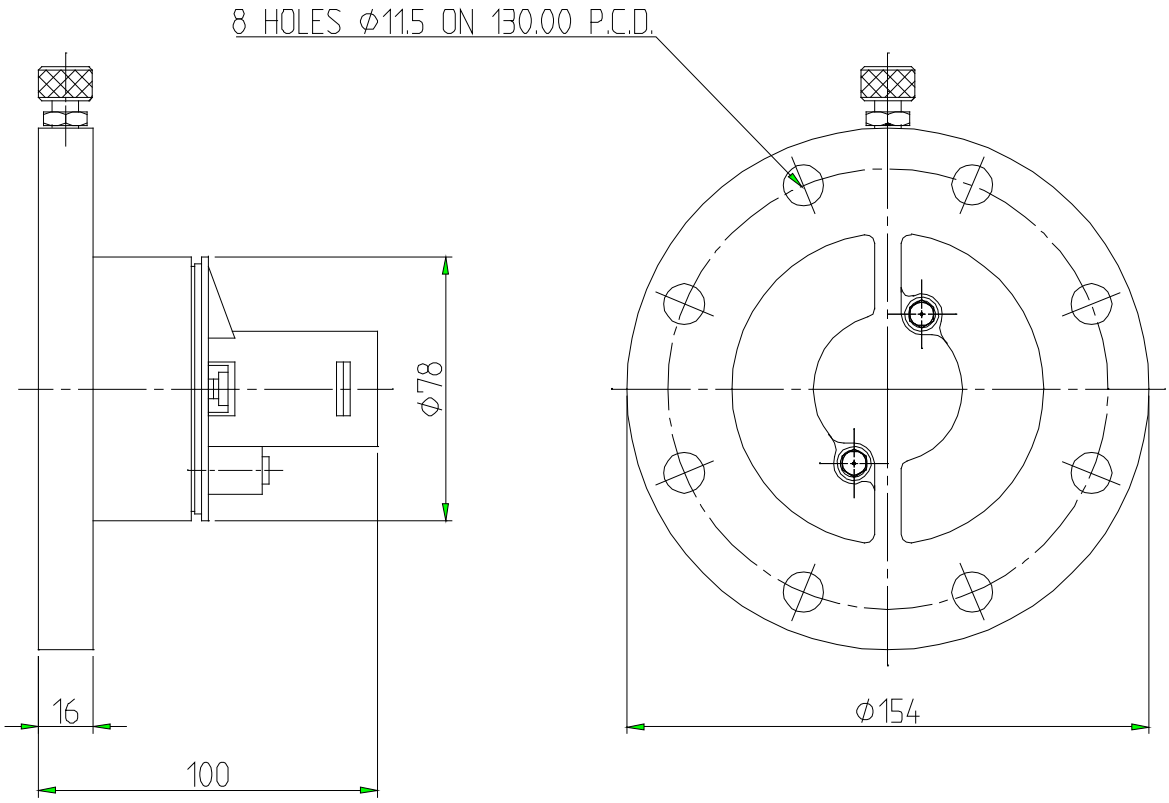

Description:	Coaming Vent Valve
Part Number:	DO70
Weight:	0,65 Kg
Material:	Aluminium
Seal Material:	Viton

5.3.3.4.2 Coaming Vent Valve Cover

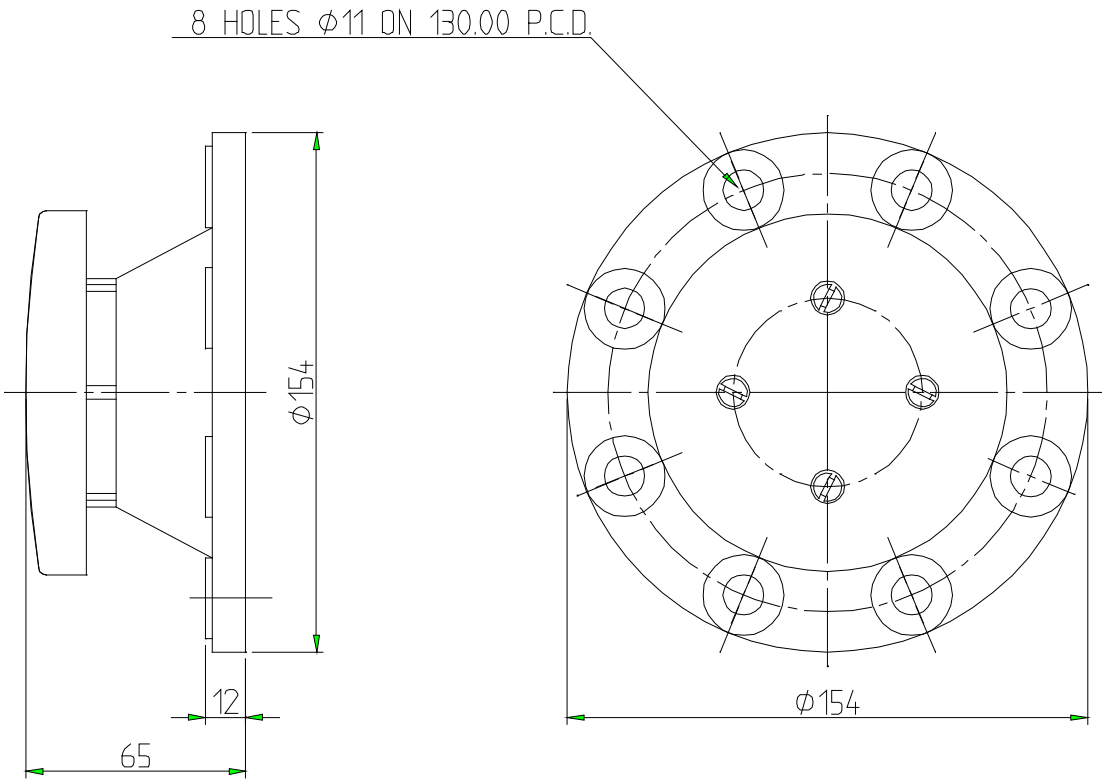

Description:	Coaming Vent Valve Cover
Part Number:	LK
Weight:	0,22 Kg
Material:	PA

5.3.3.4.3 Compartment Vent Valve

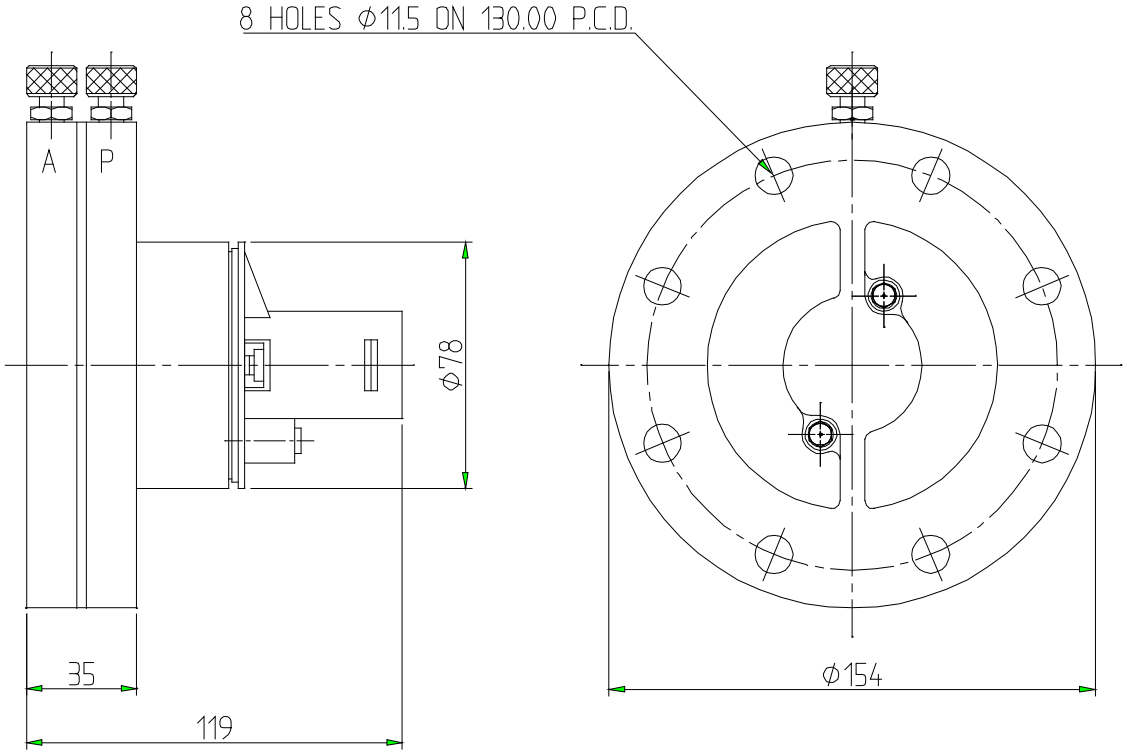

Description:	Compartment Vent Valve
Part Number:	DO70-F
Weight:	1,25 Kg
Material:	Aluminium
Seal Material:	Viton

5.3.3.4.4 Flame Arrestor

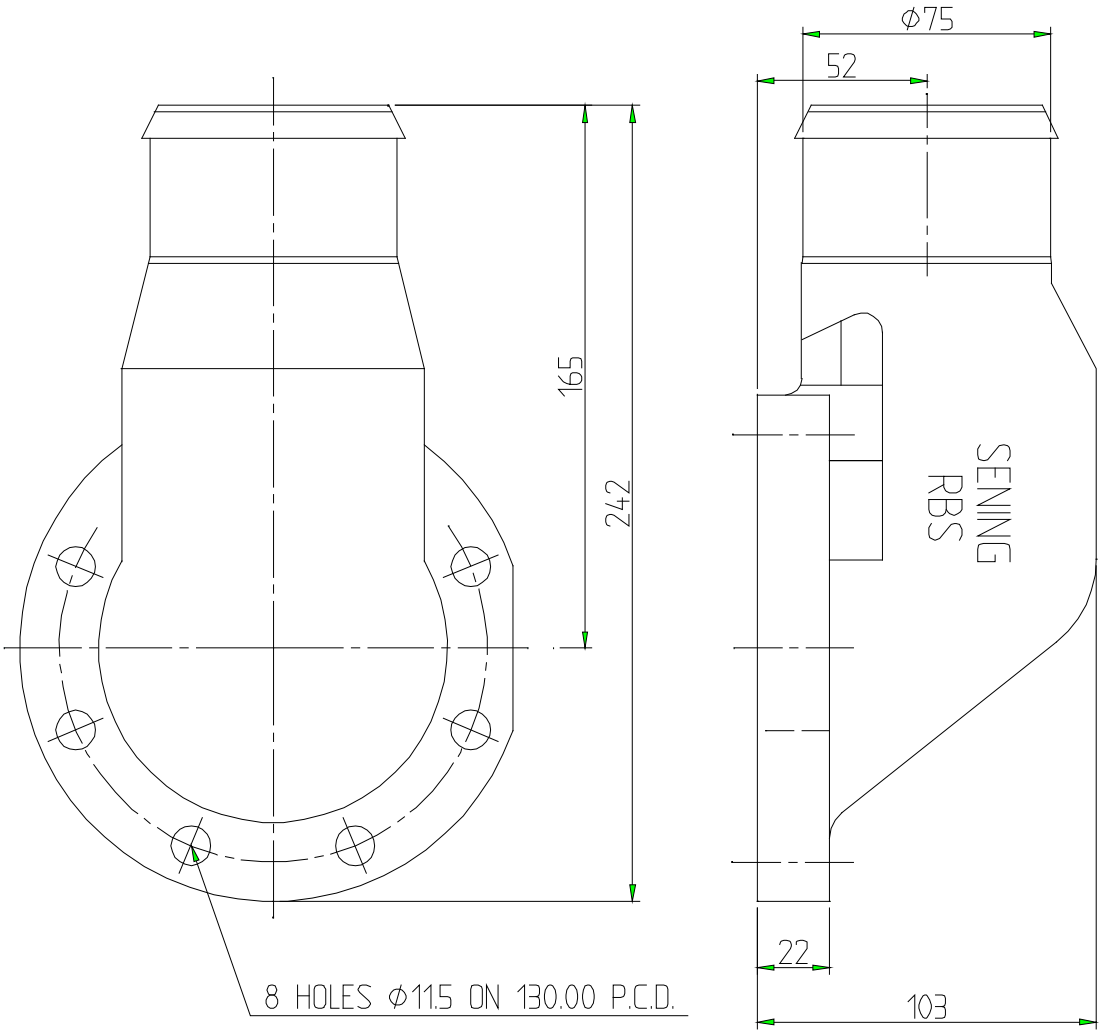

Description:	Flame Arrestor
Part Number:	RBS
Weight:	1,5 Kg
Material:	Aluminium

5.3.3.4.5 Vapour Recovery Valve

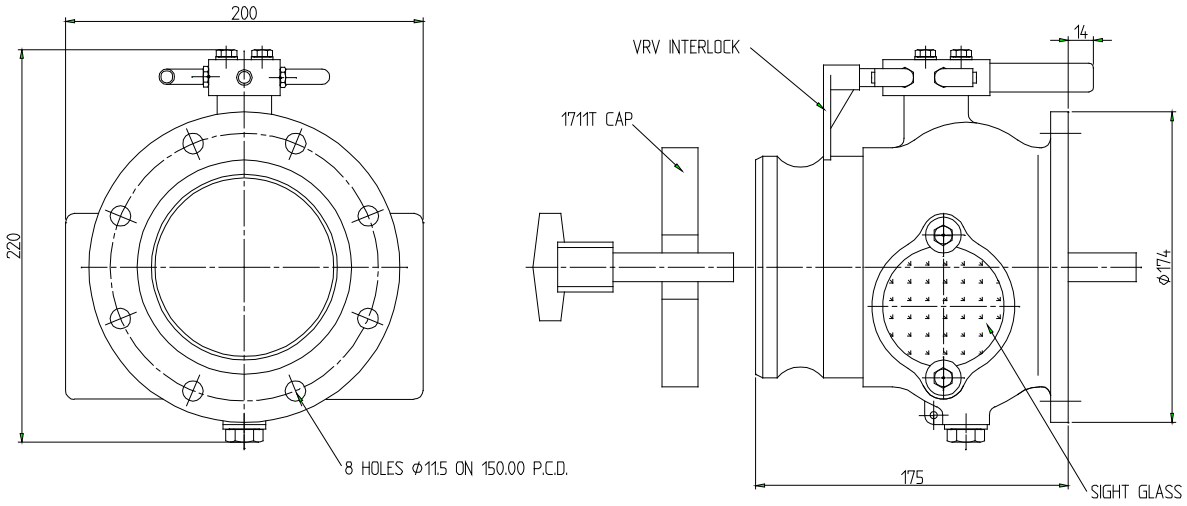

Description:	Vapour Recovery Valve
Part Number:	VRV + IN1/4-VRV + 5300400
Weight:	4,35 Kg
Material:	Aluminium
Seal Material:	Viton

5.3.3.4.6 Footvalve

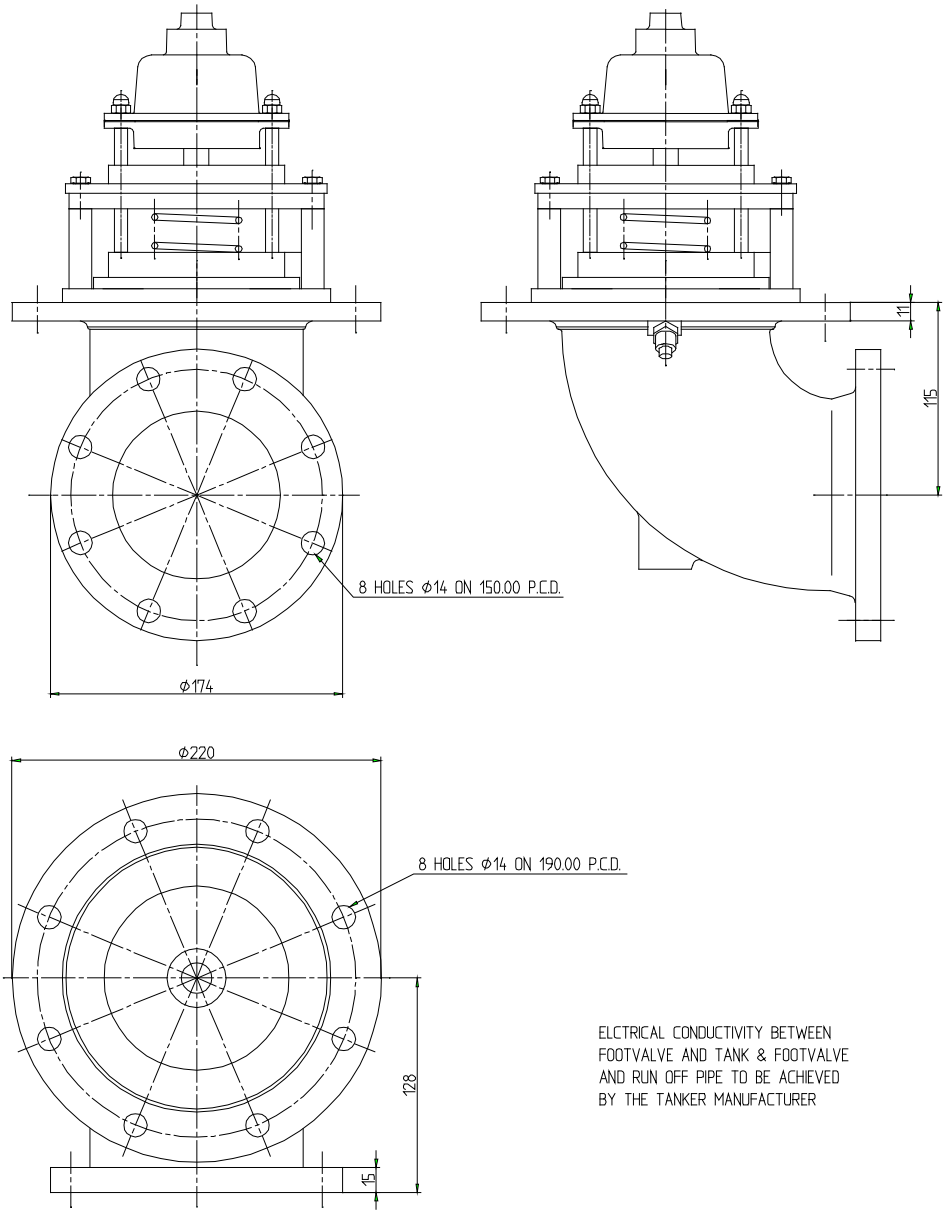

Description:	Foot Valve
Part Number:	BO100-N
Weight:	4,95 Kg
Material:	Aluminium
Seal Material:	Viton

5.3.3.4.7 Footvalve F1

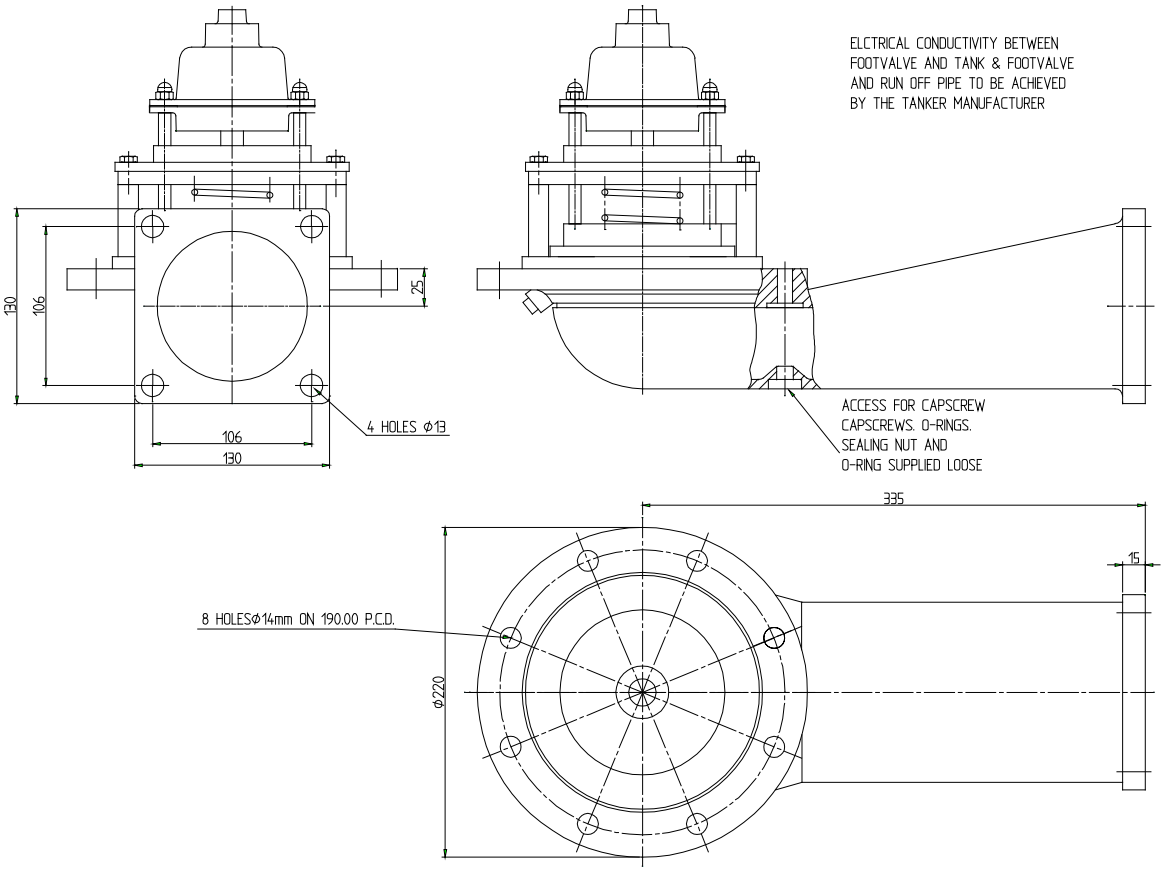

Description:	Foot Valve
Part Number:	BO100-F1-N
Weight:	6,6 Kg
Material:	Aluminium
Seal Material:	Viton

5.3.3.4.8 Footvalve F2

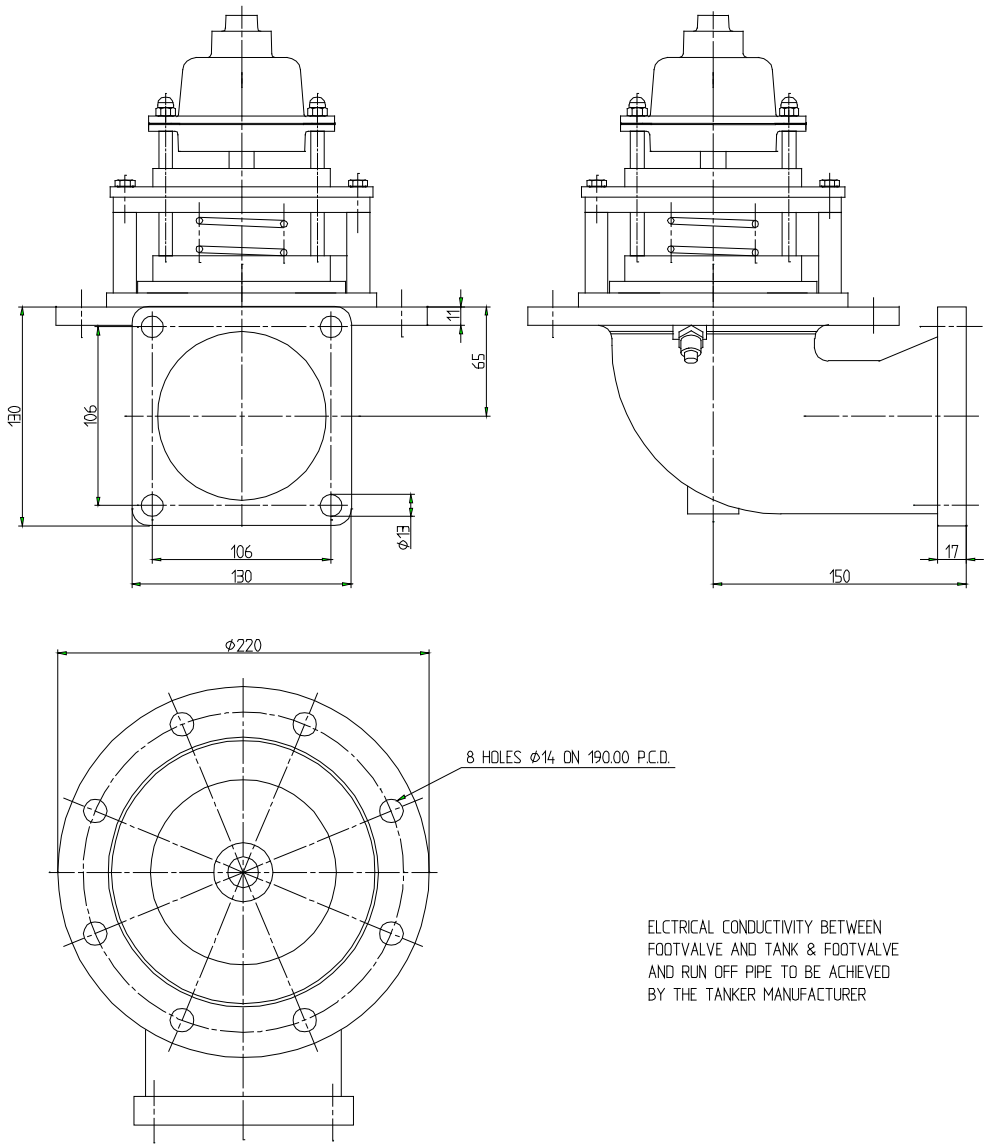

Description:	Foot Valve
Part Number:	BO100-F2-N
Weight:	5,2 Kg
Material:	Aluminium
Seal Material:	Viton

5.3.3.4.9 Pneumatic API Coupling

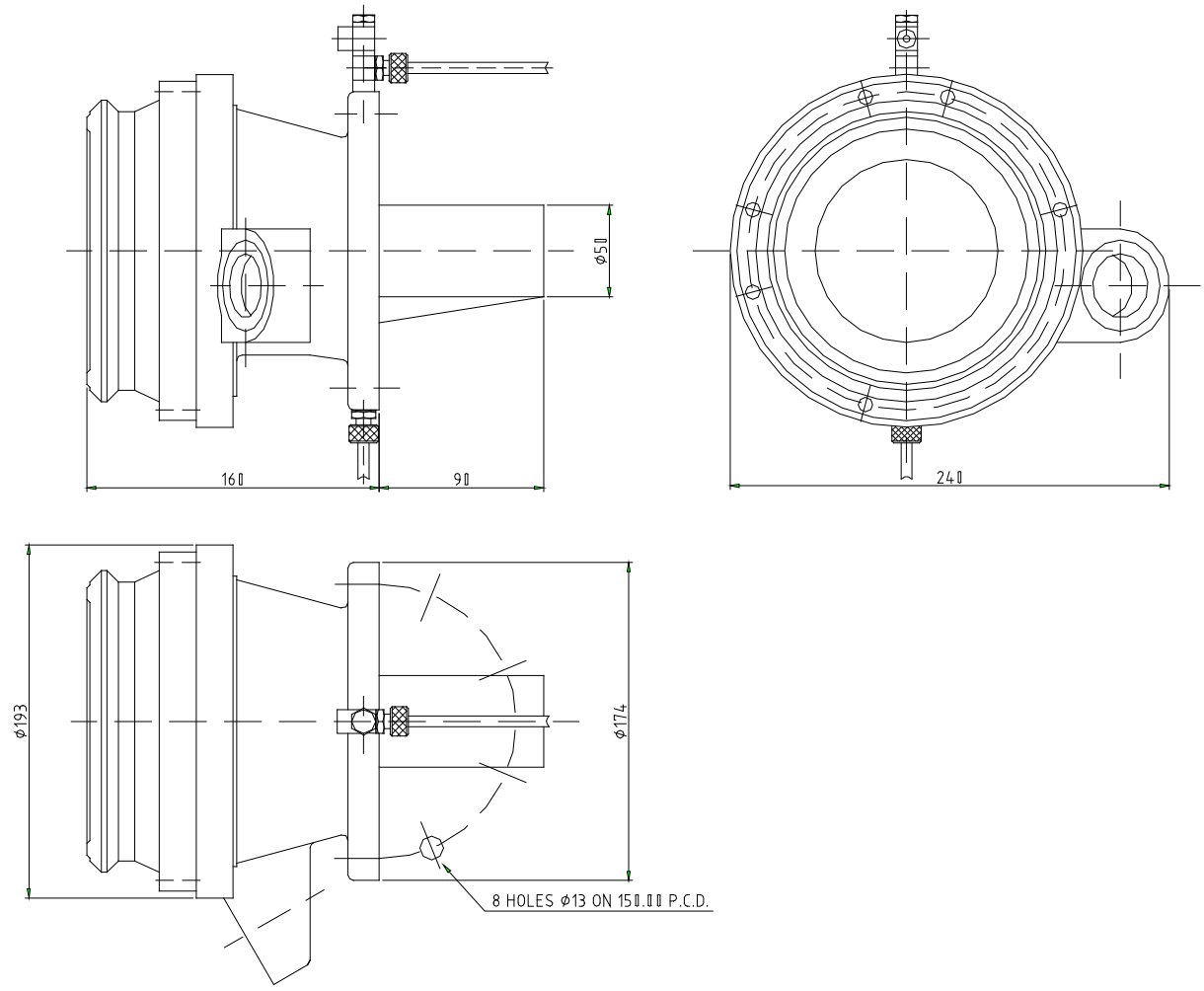

Description:	Pneumatic API Coupling
Part Number:	VKAP-100-I2
Weight:	
Material:	Aluminium
Seal Material:	Viton

SPD Sensor not shown

5.3.3.4.10 Emergency Button

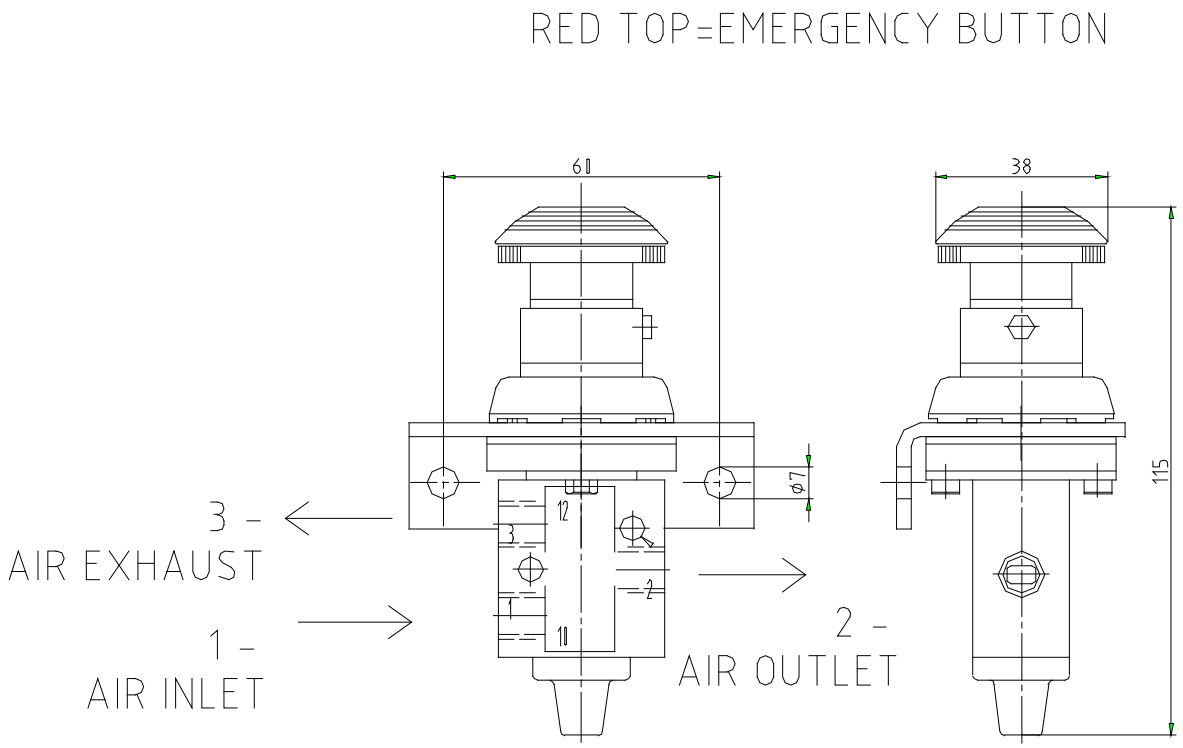

Description:	Emergency Button
Part Number:	5300423
Weight:	Kg
Material:	
Seal Material:	

5.3.3.4.11 Master Guardbar Interlock

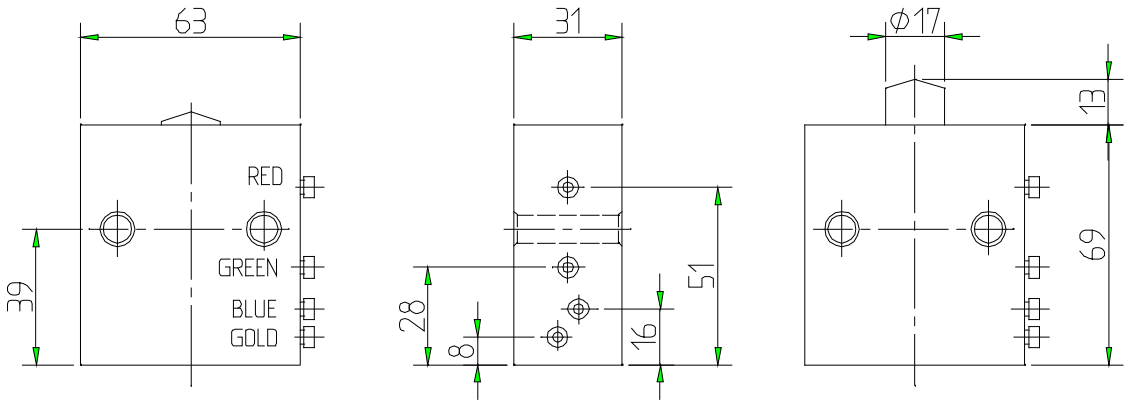

Description:	Master Guardbar Interlock
Part Number:	5300402
Weight:	0,4 Kg
Material:	Aluminium
Seal Material:	

5.3.3.4.12 Auxiliary Guardbar Interlock

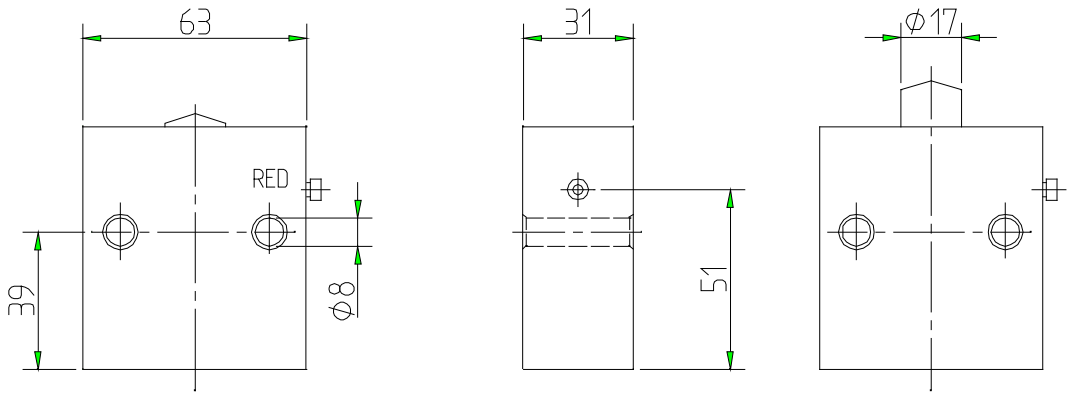

Description:	Auxiliary Guardbar Interlock
Part Number:	5300403
Weight:	0,4 Kg
Material:	Aluminium
Seal Material:	

5.3.3.4.13 Pneumatic Filter and Lubricator

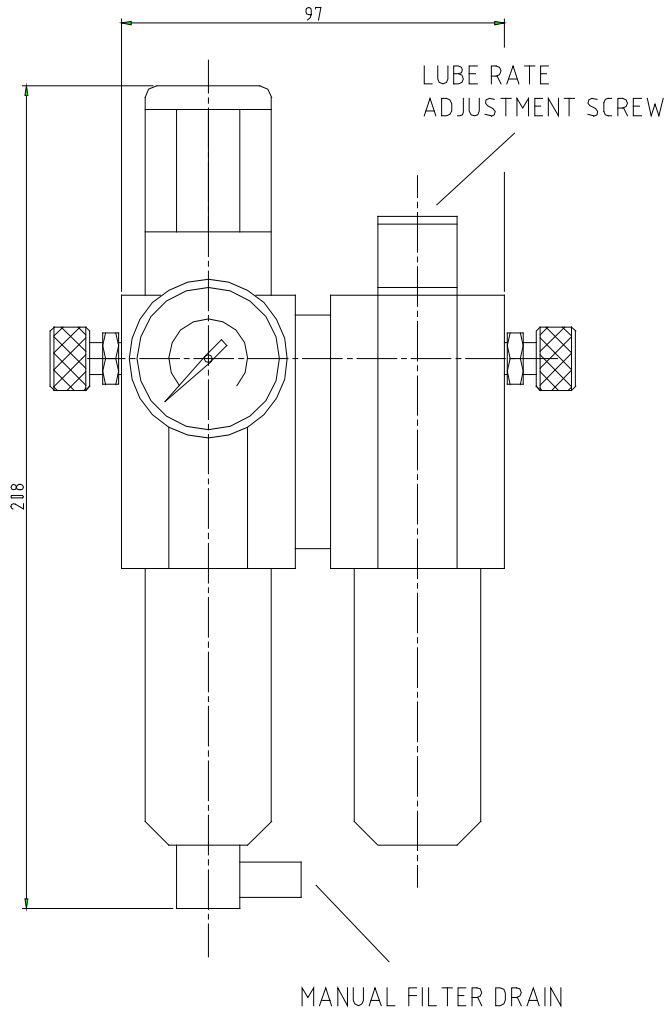

Description:

Part Number:

Weight:

Material:

Seal Material:

5.3.3.4.14 Gasket

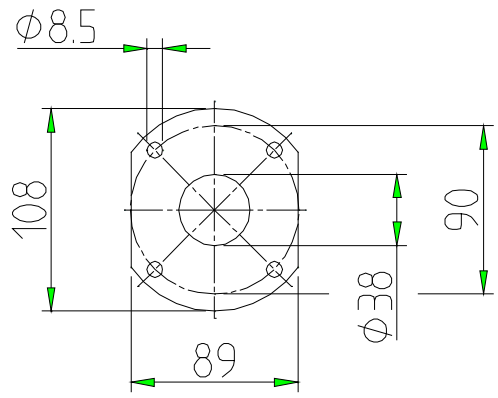

PART NUMBER: 6300100

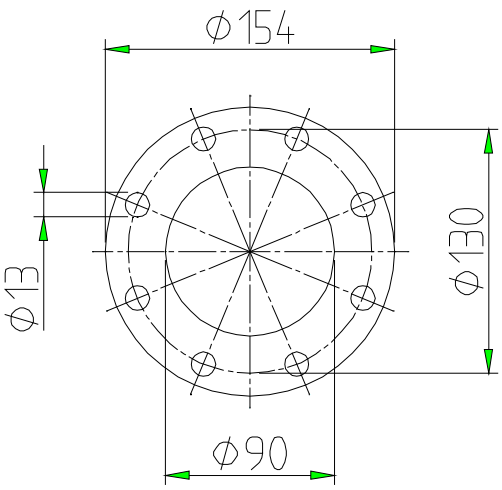

PART NUMBER: 6300107

MATERIAL: 2MM THICK GRAPHITE LAMINATE ELECTRICALLY CONDUCTIVE

Description:	Conductive Gasket
Part Number:	6300100 6300107
Material:	Electrically conductive graphite laminate

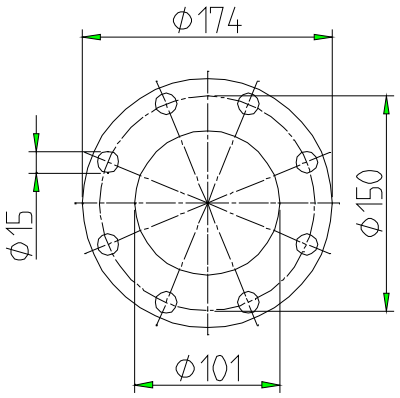

PART NUMBER: 6300119

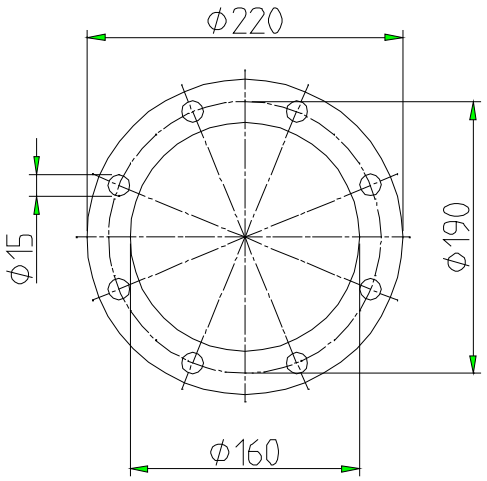

PART NUMBER: 6300108

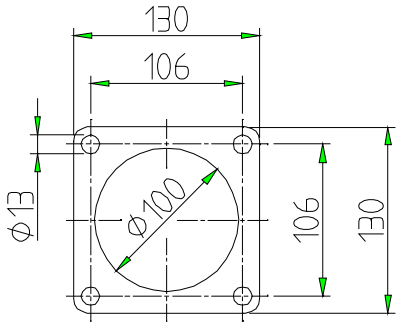

PART NUMBER: 19185

MATERIAL: 2MM THICK RUBBER BONDED CORK GASKET

Description:	Gasket
Part Number:	6300119 6300108 19185
Material:	Rubber bonded cork casket

5.4 Electronic system

The NoMix 2000 main unit and the associated interface modules including the display interface are installed in instrument cabinets on the semitrailer. The semitrailer cable from F.A. Sening is used for the battery supply and the data exchange to the printer via the printer port, or optionally via the "external" CAN bus to the EMIS interface, to which an on-board computer is connected.
Alternatively, the interface modules can be installed on a mounting plate (see drawing no. E11.351493 and E11.351498).

5.4.1 Wiring of the battery and the internal CAN bus

Only the appropriate cable (part no. NM2KABEL) may be used for wiring of the battery supply and of the internal CAN bus between the main unit and all interface modules. The shield of the connection cable only provides mechanical protection; it does not have to be fitted. The NoMix 2000 main unit and the associated interface modules are connected according to the following connection diagrams, depending on the version and configuration:

NoMix 2000 connection diagrams	Drawing no.:
Basic connection diagram	E11.351489
System wiring diagram	E11.351488
Main Unit & Display system wiring diagram	E81.351676
Detailed connection diagram, main unit	E51.351351
Detailed connection diagram, display interface	E51.351352
Main Unit & Display detailed wiring diagram	E51.351673
Detailed connection diagram, wetleg sensor-interface	E51.351346
Detailed connection diagram, TAG interface	E51.351478
Detailed connection diagram, I/O interface	E51.351468
Detailed connection diagram, SPD sensor interface	E51.351347

Additionally, the associated connection diagram has been stuck into each housing cover or onto the sealing compound of the display interfaces.

The terminal blocks for the battery, printer and CAN bus wiring are not screw-type terminals, but terminals with a tension spring connection. The cables are not screwed, but inserted from above.

- A screwdriver with a blade width of 2.5 mm is required for opening the tension spring (included).

The following steps are required for the safe connection of the wires (see figure opposite):

- Strip the insulation off the wire.
- The use of wire sleeves is not required.
- Use the screwdriver to push open the terminal clamp.

  Insert the wire into the opened terminal.
  Remove the screwdriver.
  Check proper fit by pulling the wire.

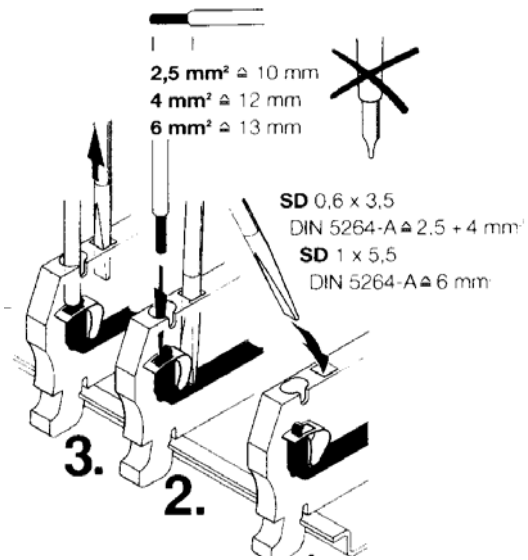

Attention: The display interface must always be installed having the cable glands pointing to the right. Display and terminals are not allowed to be mounted opposite to each other!

For the CAN bus connection, the main unit must form the start of the CAN bus chain; the connection of the other interface modules varies.

Example 1:

Main Unit ↔ Display-IF ↔ Wetleg Sensor-IF ↔ I/O-IF ↔ TAG-IF ↔ SPD-Sensor-IF

or:

Example 2:

Main Unit ↔ I/O-IF ↔ SPD-Senor-IF ↔ TAG-IF ↔ Display-IF ↔ Wetleg Sensor-IF

5.4.2 Sensor & I/O connections

5.4.2.1 Wetleg sensor interface

The wetleg sensors, type NS-2E, of the individual tank truck compartments (maximum 6) and the main pneumatically operated switches are connected according to drawing no. E51.351346. (see also connection diagram inside the housing cover).

5.4.2.2 TAG interface

The connection of the TAG scan signals with the insulated API couplings and vapour recovery connectors is established according to drawing no. E51.351478 using cable set part no. ASS-GS-K25M. The TAG scan required signals are shown in drawing no. E51.351478

5.4.2.3 I/O interface

The connection of the solenoid valves and the optional input circuits is established according to drawing no. E51.351468.

5.4.2.4 SPD sensor interface

The SPD sensors are connected to the SPD sensor interface according to drawing E51.351347 (see also connection diagram inside the housing cover).
The SPD sensor interface can accommodate up to 20 SPD sensors or pneumatically operated switches for monitoring the:

- API couplings
- Foot valves
- Man lid (optional)

If all possible 20 sensors are connected, for interfaces of the first generation an additional junction box, part no. NM2KKSPD, has to be installed.

The sensors of the API couplings, foot valves etc. associated with the respective compartment should always be connected in blocks, e.g. API couplings: input 1 to 6; foot valves: input 7 to 13.

☞ The actual sensor assignment must be recorded. An "S.P.D. sensor assignment" form is provided for this purpose in Chapter 12.2. **Please copy this form, fill it in and add it to the tank truck documents.**
These data are required for setting up the NoMix 2000 system (see Chapter 6.1.1.1.9).

The polarity of the connection line can be found in the following table or in the table in Chapter 6.1.1.1.9:

Coupling / valve / sensor	Wire (+)	Wire (-)
API coupling VKAP100-I2	brown (BN)	white (WH)
API coupling VKVP-I	brown (BN)	white (WH)
foot valve (MSDSO)	brown (BN)	white (WH)
Man lid	brown (BN)	white (WH)

5.4.2.4.1 Second SPD sensor interface

If more than 20 SPD sensor channels are required, a second or third etc. SPD sensor interface must be installed. The address / node number of the second and third etc. SPD sensor interface must be set at DIP switch SW1 on the CPU board of the SPD sensor interface.

The CAN bus node number of all SPD sensor interfaces is set in the factory to node number 1. This address is maintained if only one interface is operated or if it is the first of a possible four.

The second device is assigned node number 2, the third device node number 3 etc.

☞ Set the node numbers of the individual devices according to the following table:

Node Number	DIP switch no. 1 [2^0]	DIP switch no. 2 [2^1]	DIP switch no. 3 [2^2]
1	OFF	OFF	OFF
2	ON	OFF	OFF
3	OFF	ON	OFF
4	ON	ON	OFF

5.4.3 Printer connection / (EMIS interface connection: optional)

5.4.3.1 Connection of a permanently installed printer

A printer that is permanently installed in the driver's cabin is connected according to the electrical system diagram drawing no. E11.351488. The printer data are transferred to the tractor unit via the semitrailer cable and an RS232 interface. A 2A fuse integrated into the junction box for the semitrailer cable is used to protect the printer.

5.4.3.2 Temporary printer / laptop connection (optional)

If no permanently installed printer is provided in the driver's cabin, an external printer or a laptop can be connected via a connection socket, part no. SPD-DR-KA2.

Such a printer / laptop is **not** suitable for operation within Ex-areas. The socket of the connection cable to the main unit must be installed outside the Ex-area. The system must be switched off prior to connecting the printer.

5.4.3.3 EMIS interface connection (optional)

Instead to a printer, the data may be transferred to an on-board computer, which is permanently installed in the driver's cabin. The on-board computer is also supplied with data via the semitrailer cable from F.A. Sening. The EMIS forms the interface between the NoMix 2000 system and the OBC system. It is connected to the external CAN bus of the NoMix 2000 system.

Please refer to the relevant manual regarding the OBC connection details.

6 Start-up

☞ Before switching the system on for the first time, re-check the wiring for correct connection and firm fit one more time.

☹ If no text appears on the display interface or not all supply voltage LEDs are lit on the main unit and on the interface modules,

☞ **immediately** switch off the system and check the complete wiring.

☺ If everything is connected properly, the display will show, for example, the following screen, and all LEDs for indicating the supply voltage at the main unit and at all interface modules will be on.

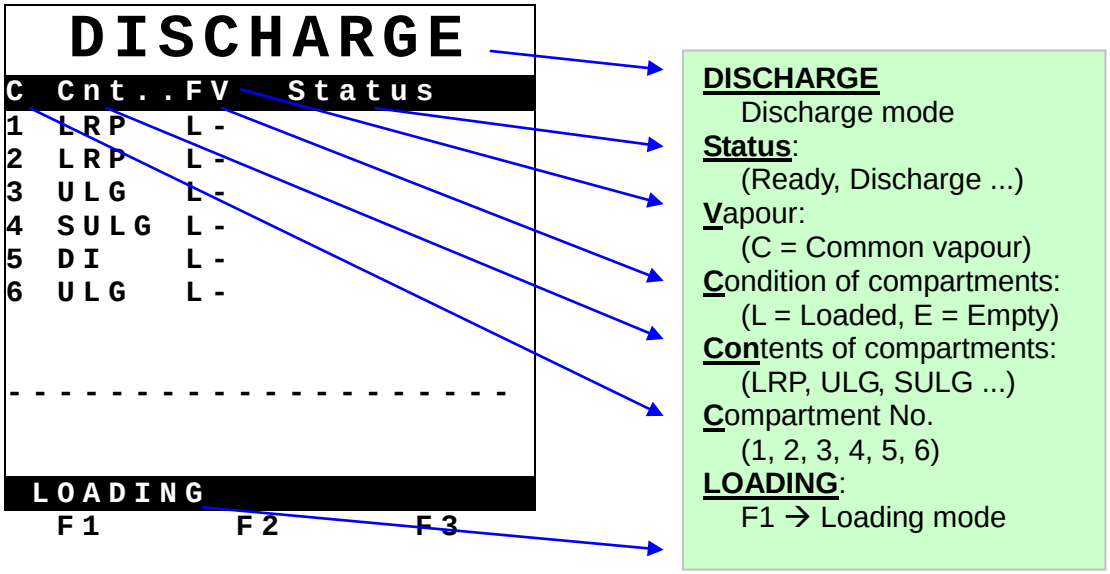

6.1 Menu structure of the NoMix 2000 system

The NoMix 2000 system comprises so-called "Pull Up and Pull Down" menus. Submenus are accessible from the main menu and vice versa.

6.1.1 Main menu

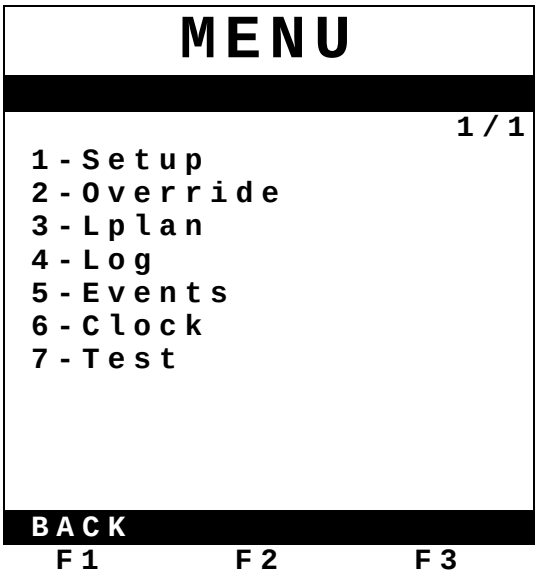

☞ The main NoMix 2000 menu is accessed by pressing the MENU key.

☞ The submenus are accessed by pressing the numeric keys preceding the respective function. Pressing the **<F1>** key executes the "BACK" command, returning to the normal function display.

6.1.1.1 SETUP menu

6.1.1.1.1 General

During commissioning of the NoMix 2000 system, the tank truck supplier has to adapt the system to the respective tank truck type.
This is done in the "SETUP" / "Settings" menu, which contains further submenus. To prevent safety-relevant parameters from being changed arbitrarily, certain parameters can only be changed after a hardware switch in the main unit has been activated (see drawing no. E51.350371 and E51.351675). If the associated LED is on, setup is enabled, and all parameters can be changed. If safety-relevant parameters have been changed by a qualified installer during setup, the function tests relevant for these changes have to be repeated.

Proper setup has to be attested by the installer and recorded on an associated form.

Attention: Once the setup is complete, the switch has to be returned to its original position, i.e. the LED will go out.

Now only non-safety-relevant parameters can be changed by entering a "password". Once the cover of the main unit has been screwed on, one of the housing screws has to be sealed and the company logo affixed.

The setup menu looks as follows:

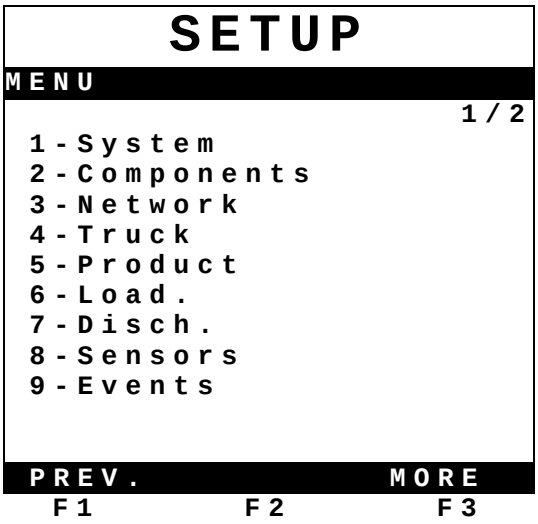

☞ The submenus are accessed by pressing the numeric keys preceding the respective function. When the word “MORE” is readable above the **<F3>** key it means that a second setup page is available which can be achieved by pressing **<F3>**.

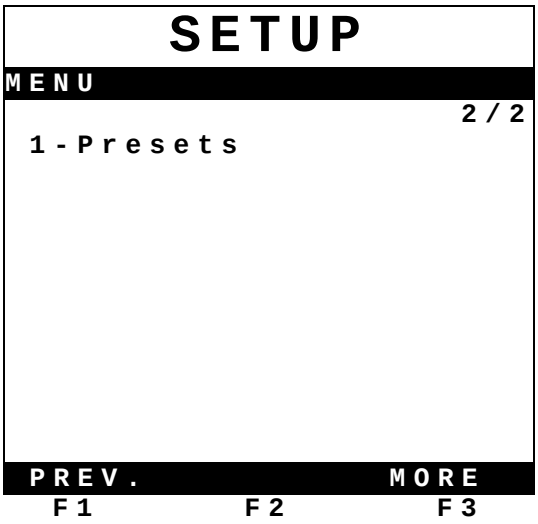

General procedure:

- If, for example, the SETUP Truck submenu has been accessed accidentally (wrong key was pressed), whereas a change was intended in the SETUP System, the SETUP Truck submenu can be quit immediately via the STOP key, without having to go through all the parameters.
- If you have advanced too far in one of the SETUP menus ("F1" key for Continue was pressed) and would like to change or review the previous parameter, you can step backward through the SETUP menu using the "<-key". You do not have to run through all the parameters of the SETUP menu and then start again from the beginning.
- For SETUP parameters that only require setting of a "0" or "1" in certain places, e.g. SETUP Disch., Parameter: "vapour recovery at discharge", the setting can optionally be made with the numeric keys "0" and "1". The "1" key, for example, is pressed twice to change from "00..." to "11...". Alternative procedure: After pressing the <Enter> key, select the parameter to be changed with the <F1> or <F3> key and change it with the <F2> key (switch-over) from "0" to "1" or from "1" to "0".

In principle, in all setup menus the parameters are changed or adjusted according to the instructions in the respective display. As the first step, a tank truck type should be pre-selected in Setup page 2, "**1-Presets**" that is closest to the tank truck being processed. This will correctly set most SETUP parameters. Some parameters will have to be adjusted for the individual tank truck.

Parameters in Setup Presets

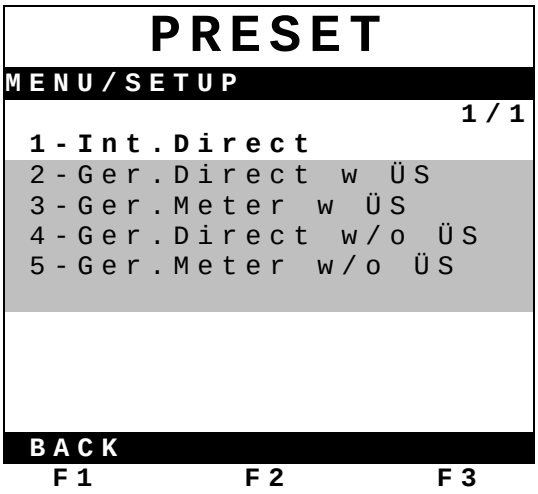

The numeric keys can be used to select the respective tank truck type. The following display will appear:

The hatched tank truck types are German tank trucks.

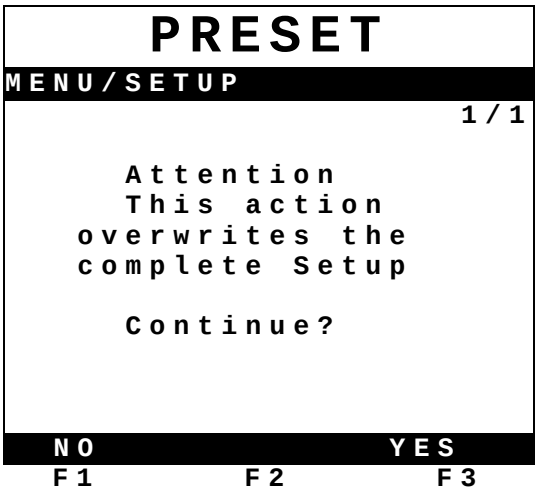

The function keys **<F1>** and **<F3>** can be used to execute the functions shown in the last row of the display:

Example for a setup change in other submenus:

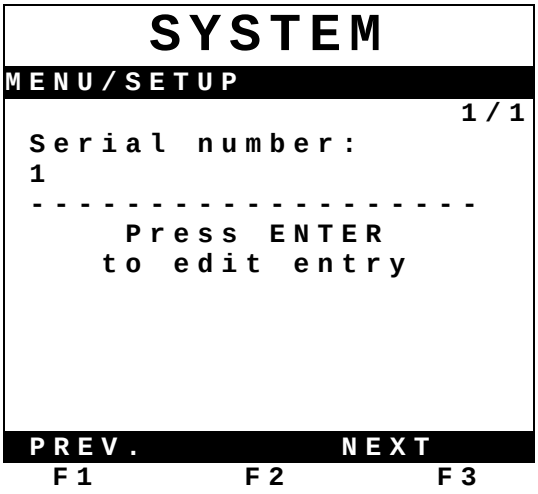

☞ The function keys **<F1>** and **<F3>** can be used to execute the functions shown in the last row of the display:

- **<F1>** = PREV. → Back to the previous setup parameter
- **<F3>** = NEXT → Continue to next setup parameter

☞ Apart from the function keys **<F1>** & **<F3>**, the arrow keys on the keypad can also be used to go to the next or previous parameter.

Changes:

☞ The SETUP can be changed in all subsequent setup submenus as follows:

- Press the **<Enter>** key
- Make the change according to the text instruction
- Press the **<Enter>** key to confirm the change

Example for a SETUP change:

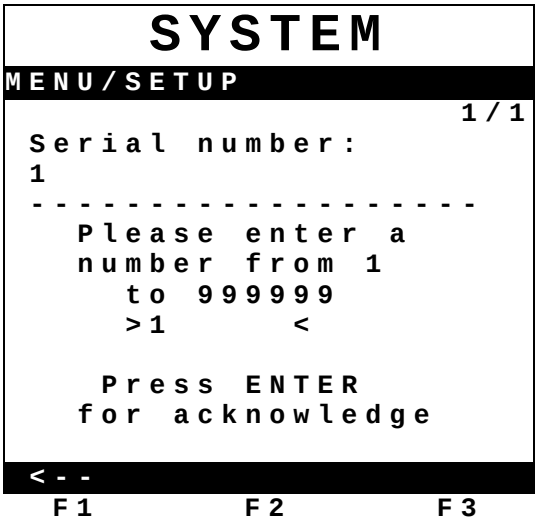

☞ Enter a 6-digit number using the **<numeric keys>** and confirm with **<Enter>**.

☞ The following display, for example, will appear, if the setup has been completed or the **<STOP>** key for exiting the setup has been pressed:

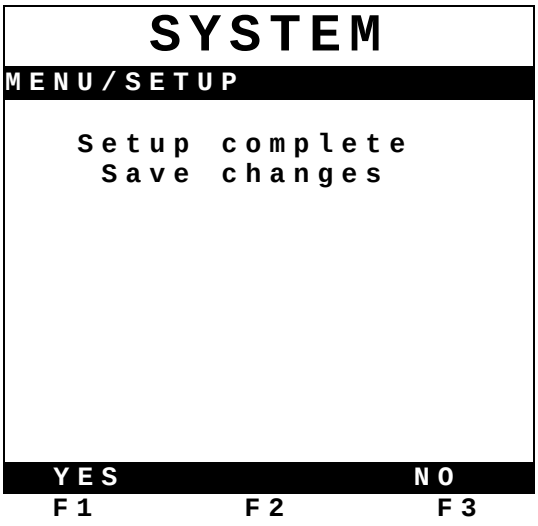

☞ The function keys **<F1>** and **<F3>** can be used to execute the functions shown in the last row of the display:

- **<F1>** = YES → setup is stored, back to main setup menu
- **<F3>** = NO → The setup is repeated

✍ In the following chapters, all setup parameter are listed in tabular form. If the setup parameter is not intuitive such as Language: German / English, it is described in detail below.

✍ The hatched parameters shown in the following tables are only relevant for German vehicles.

6.1.1.1.2 System setup

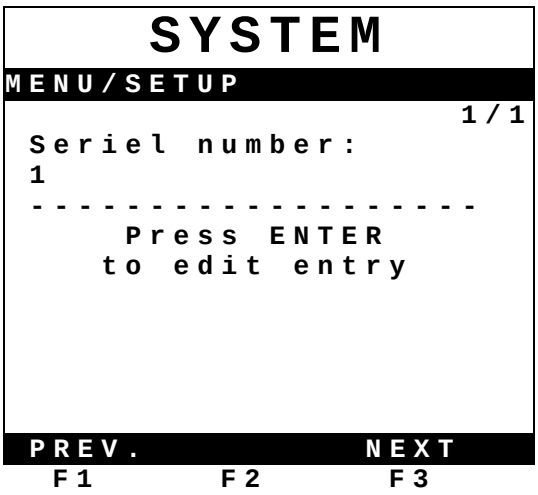

☞ The following parameters can be set in System setup. The procedure is described in Chapter 6.1.1.1.1 (General procedure).

Parameter description	Possible content	Security feature
Serial number	6-digit number	Switch
Operation language	German	password
	English	
Date order	**Day-month-year**	Switch
	Month-day-year	
Manual Sealing	**Yes**	Switch
	No	
Power OFF breaks seal	Yes	Switch
	No	
Printer access	**Exclusive access**	Switch
	Shared access	
	Network	
	Not installed	
Baud rate	**9600**	password
No. of lines	**55**	Switch
No. of columns	**35**	Switch
Identification necessary	Yes	Switch
	No	
Password	5-digit number	password

6.1.1.1.2.1 Serial number

The serial number of the main unit (NM2MAIN) has to be entered here.

6.1.1.1.2.2 Manual sealing permitted

If this parameter is set to **<YES>**, the compartments may be manually re-sealed if loading was interrupted temporarily at the depot or in case of split discharge at two petrol stations.

6.1.1.1.2.3 Switching off breaks seal

With NoMix & SPD functionality, the SPD sensors must be monitored continuously. To this end, the system is connected with the permanent power supply. The system should not be switched off during operation. If the setup parameter is set to **<YES>**, the seals of all compartments are broken if the system is switched off.

6.1.1.1.2.4 Printer

- Exclusive access: only the NoMix 2000 system has access to the printer.
- Shared access: other devices apart from NoMix 2000 also have access to the printer.
- Network: The printer is connected to an on-board computer / TMC, for example, within a network. NoMix 2000 or others devices have no direct access to the printer.
- Not installed: no printer is installed.

Note: Shared access and network printing is not supported yet with software version 1.40

6.1.1.1.2.5 Baud rate / no. of rows / no. of columns /

The factory setting is as follows and should not be changed:

- Baud rate: 9600
- No. of rows: 55
- No. of columns: 35

> If the printer data should be transfered to a laptop an individual baudrate of 4800, 9600, 19200, 38400, 57600 or 115200 can be used. For a quick data transfer it is recommended to use the highest Baudrate of 115200. The NoMix 2000 Baudrate has to be the same as the laptop baudrate.

6.1.1.1.2.5.1 Identification necessary

If this parameter is set to **<Yes>** the driver has to key in some data before changing into the loading or discharge mode. This data are used as a release for loading and discharge. Without doing this no loading or discharge can be carried out.

The following data have to be keyed in:

- Shift number: Format: max. 4-digit numeric
- Tour number: Format: max. 4-digit numeric
- Depot / Station number: Format: max. 8-digit numeric

The release will be cancelled automatically after a timeout of 60 minutes. The start point of the timeout is the moment when loading- / discharge-mode changes to passive. That is when no loading arm or discharge hose is connected.
An override is not possible and the identification data are recorded in the event logbook

6.1.1.1.2.6 Password

Via the NoMix password, certain setup parts (non-safety-relevant parameters) can be changed. Other, safety-relevant parameters can only be changed after activating a hardware switch in the NM2MAIN main unit.

Possible selection: 5 numeric characters

6.1.1.1.3 Components setup

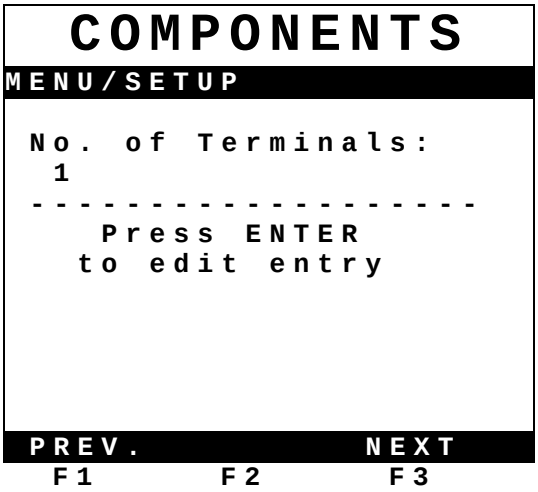

☞ In the Components setup, the type and number of installed interface modules is specified. The procedure is described in Chapter 6.1.1.1 (General procedure).

Description No. of	Possible content	Security feature
Terminals	**1**	Switch
Wetlegsensor-IF	**1**	Switch
Overfill-IF *)	**0**	Switch
Output-IF	**1**	Switch
TAG-Scan-IF	**1**	Switch
Hallsensor-IF *)	**0**	Switch
SPD-Sensor-IF	**1**	Switch

*) parameter not visible or only relevant for German tank trucks

6.1.1.1.4 Network setup

Among other features, the NoMix system also has a so-called external CAN bus. This is a communication connection, through which NoMix can send data to an EMIS interface. Via the EMIS interface, data can then be sent to other devices, e.g. an on-board computer.

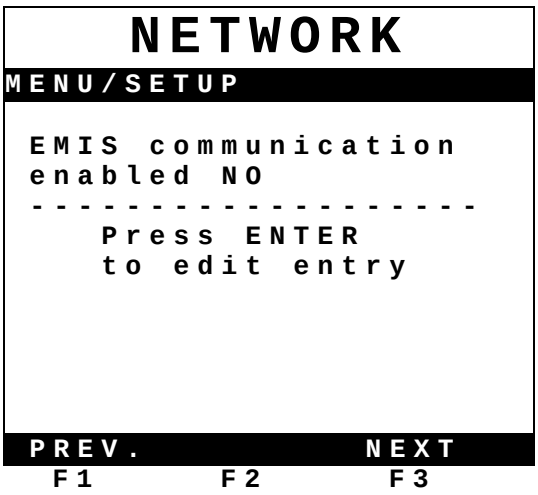

☞ Whether or not the NoMix 2000 system is connected to an EMIS interface is specified in Network setup. If **<YES>** is set, further detailed settings are required. The procedure is described in Chapter 6.1.1.1.1 (General procedure).

Description	Possible Content	Security Feature
EMIS-Interface-Communication	YES	Switch
	NO	

Detailed settings if **<YES>** is set (not relevant for British tank trucks):

Parameter description	Possible content	Security feature
EMIS-note number	21	Switch
Record events	YES	Switch
	NO	
Events sent to:	21	Switch
Own note number	11	Switch
CAN-communication forced	YES	Switch
	NO	

6.1.1.1.4.1 EMIS interface communication possible

Possible selection: yes / no

specifies whether or not an EMIS interface is installed on the tank truck.

6.1.1.1.4.2 EMIS node number

On a tank truck with EMIS interface communication, several electronic systems can be connected with the communication line (CAN bus). Each connected electronic system has its own node number.

EMIS node number: 21

6.1.1.1.4.3 Save events

Possible selection: yes / no

If "yes" has been set, all events are registered and stored.

6.1.1.1.4.4 Events sent to:

Events should be sent to the EMIS Interface note number: 21

6.1.1.1.4.5 Own node number

NoMix 2000 has node number 11.

6.1.1.1.4.6 CAN bus connection required

Setting = yes: It is imperative that the CAN bus connection between NoMix and EMIS is intact. Otherwise the complete system goes into fault state.

Setting: = no: If a fault occurs in the CAN bus connection, NoMix continues to operate as a stand-alone system without EMIS connection.

6.1.1.1.5 Truck setup

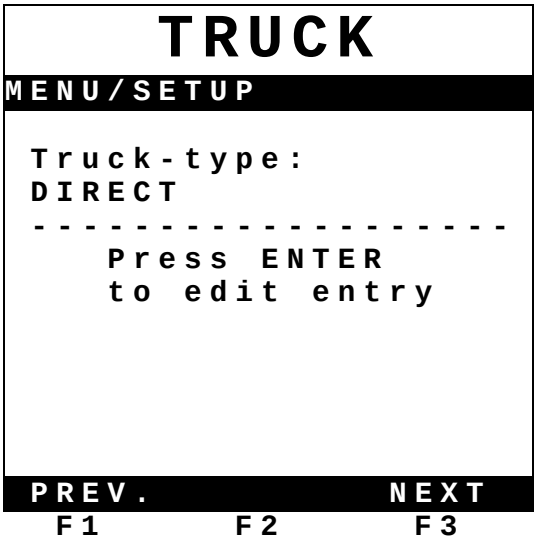

☞ Tank truck-specific parameters are set in Truck setup. The procedure is described in Chapter 6.1.1.1.1 (General procedure).

Parameter description	Possible content	Security feature
Truck-Type	**Direct**	Switch
	Measuring *)	
	Hybrid *)	
Number of compartments	1-**6**	Switch
No. of OP *)	**0**	Switch
No. of meter *)	**0**	Switch
No. of 2” vapour nozzles *)	**0**	Switch
Common vapour installed	**Yes**	Switch
	No	
Footvalves pressure balanced	Yes	Switch
	No	
Air pressure switch installed	**Yes**	Switch
	No	
Supervise loading of pipes	**Yes**	Switch
	No	
DMS-Option *)	Yes	Switch
	No	

*) parameter not visible or only relevant for German tank trucks

6.1.1.1.5.1 Tank truck type

The tank truck type currently supported by the software is described in Chapter 4.

6.1.1.1.5.2 Pneumatically operated switch present

In general, all pneumatic control units equipped with F.A. Sening fittings require an air pressure between 3 bar and 7,5 bar for safe operation.
To ensure safe operation of the pneumatic control, the system must be able to detect if the air pressure falls below the minimum required pressure of 3 bar.
To this end, a main pressure switch is installed in the air line from the vent valves to the NoMix solenoid valves, directly behind the vent valves. The electrical connection is established at input 1 of the wetleg sensor interface according to drawing no.: E51.351346. The pressure switch, which is activated at an air pressure of 3.2 bar ± tolerances, is continuously monitored by the NoMix system. If the air pressure is below 3,2 bar, or if the air pressure falls below 3,2 bar, discharge / loading cannot be started or is immediately interrupted.

6.1.1.1.5.3 Hose supervision

NoMix 2000 is able to monitor the fill level of the pipe system. A distinction is made between the compartment level and the pipe level. However, since the compartment is not directly equipped with a level sensor, its state has to be determined via a "detour".

Level monitoring is an additional safety function that minimises the risk of mixing, even in case of incorrect operation.

Level monitoring is particularly significant in connection with the SPD system: To ensure that, during discharge from a sealed compartment, only the product volume is discharged that has been loaded at the depot according to the printout from the flow meter, the pipe must be empty. Otherwise the quantity would be exceeded by the volume contained in the pipe.

- **The level monitoring principle**

Level monitoring is based on the following basic principles:

- As long as a compartment is open and the wetleg sensor reports "dry", the compartment must be empty.
- If the wetleg sensor for an open compartment reports "wet", the compartment cannot be empty.
- If a compartment is closed, the state of the wetleg sensor is stored and forms a compartment filling state.

From this stored compartment filling state and the current state of the wetleg sensor, the following combination can be established:

Stored compartment filling state	State of the wetleg sensor	Compartment state (also detailed display)
not empty	wet	not empty
not empty	dry	not empty
empty	wet	Remaining volume
empty	dry	Empty

Comments:

- If the setup allows loading onto remaining quantities, only an identical product may be loaded.
- If the SPD functionality with pressure switch at the foot valve is also installed, the pressure switches are also monitored. This means that a compartment is only opened if NoMix 2000 has released the foot valve and the pressure switch simultaneously detects compressed air. Correspondingly, closing of a compartment can be initiated and detected either by deactivating of the NoMix 2000 solenoid valve or by a drop in air pressure at the foot valve.
- Once an "empty" compartment has been closed, drip quantities can no longer be considered.

6.1.1.1.5.4 DMS option installed

Setting = no only relevant for German tank trucks

6.1.1.1.6 Product setup

☞ Product-specific parameters are set in the Product setup. The procedure is described in Chapter 6.1.1.1.1 (General procedure).

Product Quality Decription	Content		Protection by
Used Uroducts	**0010111000000000**		Switch
Leaded Products	**0000100000000000**		Switch
Product No. 3: **Diesel**	Name:	**DI**	Switch
	Danger Class:	**AIII**	
	Ref. Code:	**2**	
	TAG-Code	**68**	
Product No. 5: **LRP (4 Star)**	Name:	**LRP**	Switch
	Danger Class:	**AI**	
	Ref. Code:	**4**	
	TAG-Code	**98**	
Product No. 6: **Unleaded 95**	Name:	**ULG**	Switch
	Danger Class:	**AI**	
	Ref. Code:	**5**	
	TAG-Code	**95**	
Product No. 7: **Super Unleaded 98**	Name:	**SULG**	Switch
	Danger Class:	**AI**	
	Ref. Code:	**6**	
	TAG-Code	**98**	

6.1.1.1.6.1 Products used

Table of products used

Product List					
No.	**Product**	**Leaded = L Unleaded = U**	**Danger Class**	**Ref. Code**	**TAG Code**
1	Not used	---	---	---	---
2	Not used	---	---	---	---
3	Diesel	U	A III	2	68
4	Not used	---	---	---	---
5	4 Star / LRP	L	A I	4	98
6	Unleaded 95	U	A I	5	95
7	Super Unleaded 98	U	A I	6	98
8	Not used	---	---	---	---
9	Not used	---	---	---	---
10	Not used	---	---	---	---
11	Not used	---	---	---	---
12	Not used	---	---	---	---
13	Not used	---	---	---	---
14	Not used	---	---	---	---
15	Not used	---	---	---	---
16	Not used	---	---	---	---

This is where the type of products to be used is selected. Even during manual input of the loading plan, only the valid products will appear.

In the following example, only products 3, 5, 6 and 7are enabled.

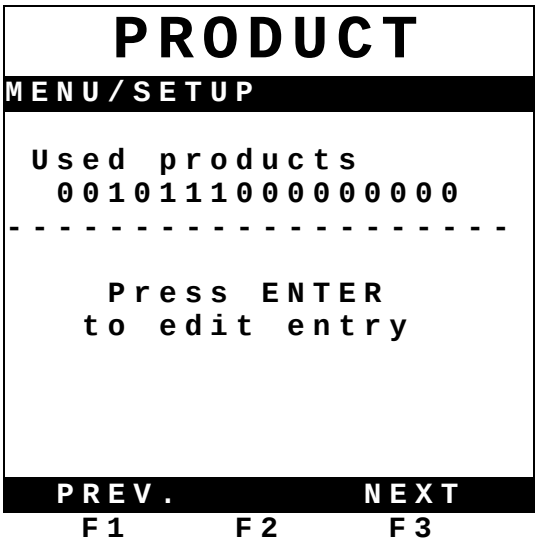

After pressing the **<Enter>** key, the products to be used are set with the numeric keys **<0>** and **<1>**.

- "0" = product not used
- "1" = product used

6.1.1.1.6.2 Leaded products

This screen is used to specify which products are unleaded or leaded

In the following example, product 5 (LRP) is leaded, all others are unleaded.

After pressing the **<Enter>** key, leaded/unleaded products are specified with the numeric keys **<0>** and **<1>**.

- "0" = product unleaded
- "1" = product leaded

6.1.1.1.6.3 Product names

All product names are set in the "Product name" setup. For each product name, up to four characters can be used. This menu can only be opened if the tank truck is completely empty. This ensures that no product codes of products that are still loaded can be altered.

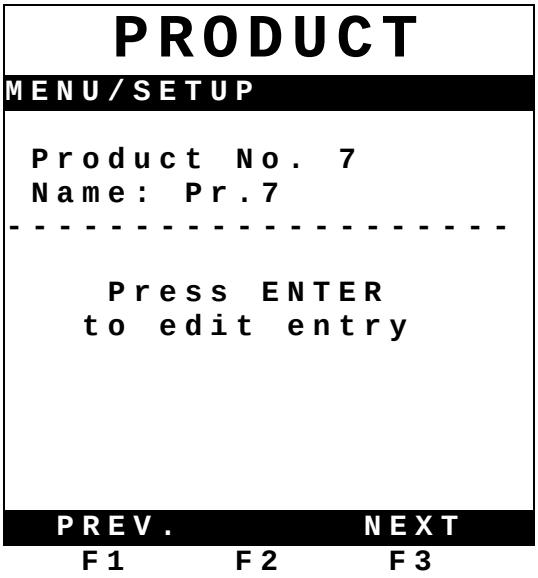

The following display appears after pressing the **<Enter>** key:

Example for a change from **>Pr.7<** to **>ULG <:**

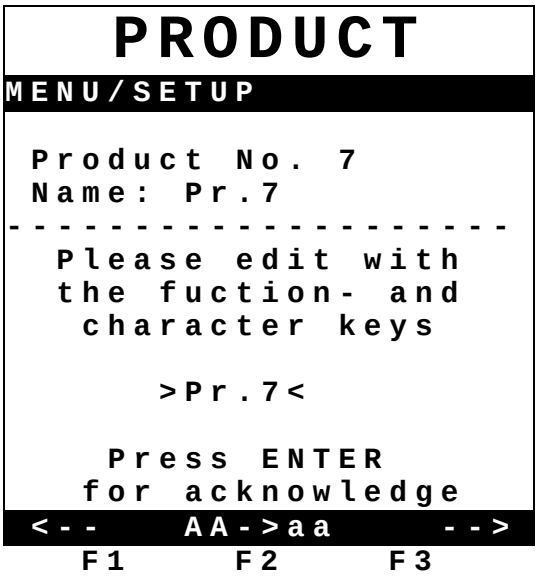

- Press the **<7 (STU)>** key four times in short succession: → **U**
- Press the **<F3>** key to go to the next character
- Press the **<4 (JKL)>** key four times in short succession: → **L**
- Press the **<F3>** key to go to the next character
- Press the **<3 (GHI)>** key twice in short succession: → **G**
- Press the **<Enter>** key to confirm

6.1.1.1.6.4 Further product-specific parameters

Further product-specific parameter are now requested or set, such as:

- Hazard class
- Reference code
- TAG code (must be set according to Chapter 6.1.1.1.6.1)

6.1.1.1.7 Loading

Parameter description	Possible content	Security feature
Loading mode	**Compartment**	Switch
	Truck *)	
No. of loadings	**3** (1 – 6)	Switch
Manual loading plan allowed	**Yes**	Switch
	No	Switch
Manual loading plan timeout	**60** (10 – 120 minutes)	
Product code correction *)	Yes	Switch
	No	
Permission valve ON	Loading mode	Switch
	Connected	
Permission valve OFF	**Comp. error**	Switch
	System error	
	Loading error	
Open automatic	**Yes**	Switch
	Not at man. LPlan	
	No	
Close compartments after loading	**Yes**	Switch
	No	
Compartment permission	**Not empty**	Switch
	Empty compartments	
	Rest amount	
Comp. Empty test	Yes	Switch
	Yes with override	
	No	
Leave comp. Open after test	Yes	Switch
	No	
TAG disconnected delay (Sec.)	**3** (0-10 seconds)	Switch
Magnet code delay (Sec.) *)	3-5	Switch
Wetleg to wet timeout (Sec)	**5**-10	Switch
Vapour recovery at loading	**0000000000000000**	Switch

*) parameter not visible or only relevant for German tank trucks

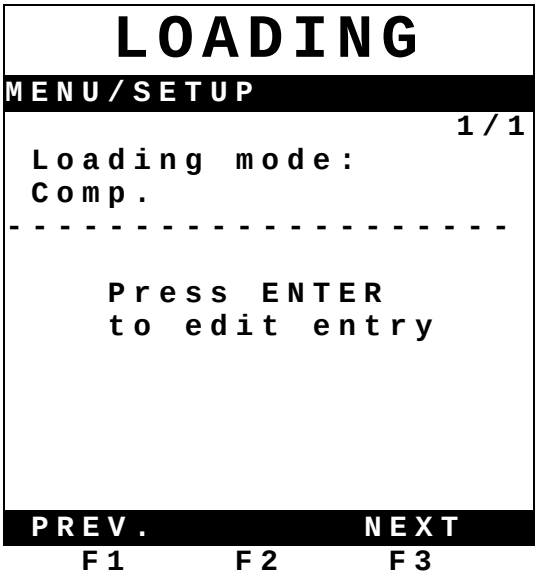

☞ Loading-specific parameters are set in Loading setup. The procedure is described in Chapter 6.1.1.1.1 (General procedure).

6.1.1.1.7.1 Loading mode: tank truck / compartment

This parameter specifies the loading mode. It affects the valve control during loading.

List of choices:

- **Tank truck:** loading is done through NoMix per tank truck. Only the loading release valve (1MV7) is switched. **(only relevant for German tank trucks):**
- **Compartment:** loading is done through NoMix per compartment. The foot valves (solenoid valves 1MV1 to 1MV6) and additionally the loading release valve (1MV7) are switched.

6.1.1.1.7.2 Number of simultaneous loading processes: 1 to 6

This parameter can be used to limit the number of simultaneous loading processes.

Min. value: 1.
Max. value: Number of compartments.

Note:
only visible if loading is done on a compartment basis.

6.1.1.1.7.3 Manual input of loading plan permitted

Specifies whether manual input of the loading plan is permitted.

Possible selection:

- permitted: bottom loading without product code and top loading are possible. The loading plan must be entered directly prior to uncoded loading

  Attention: After setting of the loading plan, the NoMix system must not be switched off until loading occurs.

- not permitted: only bottom loading with product code is permitted.

6.1.1.1.7.4 Deactivation time for manual loading plan input: 10 to 120 minutes

A time between 10 and 120 minutes can be selected here. It determines when a compartment is closed automatically after the loading plan has been entered manually. A override is always reset if the NoMix system is switched off.

6.1.1.1.7.5 Product code correction

Setting = NO

only relevant for German tank trucks

6.1.1.1.7.6 Loading release valve ON: loading mode / connected

Controls the switch-on behaviour of the loading release valve (1MV7).

List of choices:

- **Loading mode**: The loading release valve is switched on, as soon as a fault-free loading mode is reached, even if no compartment is connected.
- **Connected:** The loading release valve is only switched on if at least one compartment is fully connected in fault-free loading mode.

Note:
Compartments are also deemed to be connected if the loading plan was entered manually (if permitted).

6.1.1.1.7.7 Loading release valve OFF: NoMix, loading, compartment fault

Controls the switch-off behaviour of the loading release valve (MV17).

List of choices:

- **System fault:** Only faults within the NoMix system (e.g. no I/O connection) lead to the loading release valve being switched off. **(only relevant for German tank trucks).**
- **Loading fault:** NoMix faults and loading faults that are not compartment-related (e.g. discharge hose connected) lead to the loading release valve being switched off. **(only relevant for German tank trucks).**
- **Comp. fault:** NoMix fault, loading fault and all compartment faults (e.g. compartment 1: wrong product) lead to the loading release valve being switched off.

6.1.1.1.7.8 Automatic opening: yes / not f. man. load. plan ent. / no

This parameter can be used to specify whether correctly connected compartments open automatically or only after the compartment number has been pressed.

List of choices:

- **Yes:** the compartments open automatically.
- **Not at manual loading plan is:** the compartments open automatically in case of coded loading, but not after manual input of the loading plan (uncoded loading).
- **No:** the compartments do not open automatically.

Note:
- only visible if loading is done on a compartment basis and with air pressure balanced foot valves.

6.1.1.1.7.9 Close compartment after loading: yes / no

This parameter is used to specify whether the compartment (foot valve) closes immediately after the loading arm has been detached or whether it remains open.

Note:
- only visible if loading is done on a compartment basis.
  A fault at a compartment that is still open leads to the compartment being closed.

6.1.1.1.7.10 Compartment loading

This parameter specifies the condition for which a compartment may not be filled. A distinction is made between the filling state of the compartment (above the foot valve) and the filling state of the pipeline (below the foot valve).

This parameter is mainly used for SPD functionality.

List of choices:

- **only empty compartment:** only empty compartments may be filled. A compartment may not be filled, if it is not empty or if there are product residues in the pipeline.
- **OK with residue:** a compartment may be filled, if the compartment itself is empty, but residue is present in the pipeline.
- **not empty OK:** any compartment may be filled (even if it is not empty), independent of the filling state of the compartment and the pipeline.

Note:

- If residues are present, they may only be topped up with an identical product (as for non-empty compartments).
- If no SPD system is installed, this parameter is normally set to "not empty OK".

6.1.1.1.7.11 Compartment empty test

The compartment empty test is used to detect any residue that may have collected in the compartments prior to loading. Obviously this means that all compartments / foot valves have to be opened prior to loading.
During the compartment empty test, all foot valves are opened for approx. 5 seconds via the NoMix 2000 solenoid valves. Depending on the Setting setup, they remain open in order to save air, or they are closed again.

Important: In case of a time-controlled compartment empty test, the main pressure switch must be installed, otherwise the test can be carried out, although the Master-block was not pulled and therefore the compartments could not be opened, despite the fact that NoMix had activated the solenoid valves.

If additionally a pneumatically operated switches are installed at the foot valves, they are also monitored.

If loading arms are connected during the compartment empty test, an error message appears immediately, and the compartments are closed.

Operation:

After changing into the loading mode, the compartment empty test display appears.

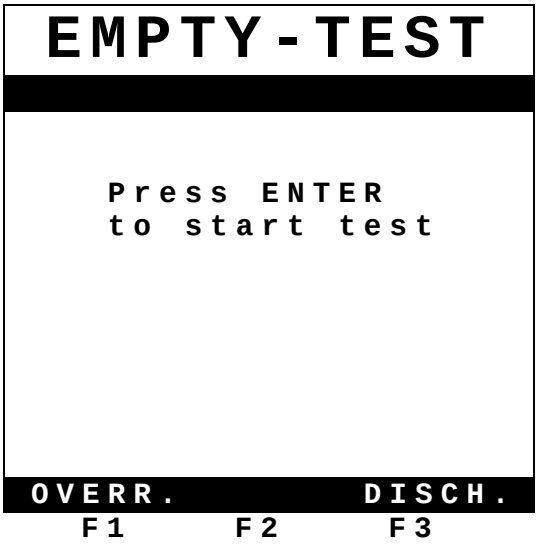

☞ Start the compartment empty test by pressing the **<Enter>** key. If a hose connection is detected during the empty test, the following error message appears immediately: "Please disconnect hose". The empty test can be aborted at any time with the **<STOP>** key. If a override according to the Setup setting is permitted, the empty test can be overrided with the **<F1>** key. This is recorded in the log book.

If residue is detected during the compartment empty test, the following display appears:

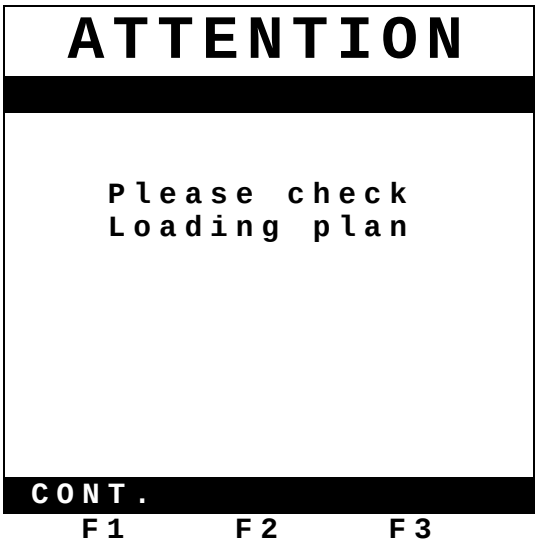

☞ Press the **<F1>** key and check in which compartment or compartments residue was detected.

6.1.1.1.7.12 Leave compartment open after empty test

This parameter can be used to specify whether the compartments should be closed after the compartment empty test, or whether they should remain open in order to save compressed air.

The compartments can be closed individually via the numeric keys or jointly via the STOP key.

If the parameter "loading release valve ON" is set to "connected", the compartments are closed independent of this parameter after the compartment empty test, since directly after the compartment empty test no compartment can be connected. This means that this parameter is only effective, if the parameter "loading release valve ON" is not set to "connected".

6.1.1.1.7.13 TAG switch-off time: 0 to 9 seconds.

This parameter can be used to specify how long a TAG is deemed to be connected after it has been disconnected. This is used to catch loose contacts during connection of the loading arm.

Min. value: 0 seconds.
Max. value: 9 seconds.

In our experience, the time should be set to 3 seconds.

Note:
- The TAG switch-off time applies only for loading, not for discharge.

6.1.1.1.7.14 Magnet code delay

Setting = 3

only relevant for German tank trucks

6.1.1.1.7.15 Wetleg sensor switch-on time

The time that can be set here specifies the delay time between the time at which the wetleg sensor changes its state from empty to full and the time at which this change is processed, (residue detection during loading / transfer of the product code into the loading plan).

possible time: 10 seconds max.

In our experience, the time should be set to 5 seconds.

6.1.1.1.7.16 Vapour recovery during loading

This parameter is used to specify which products require vapour recovery.

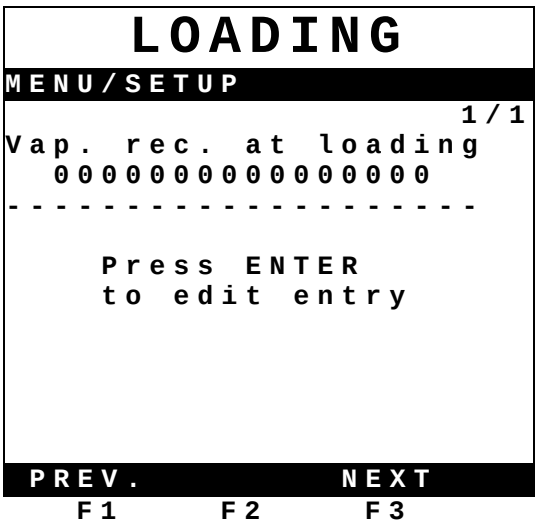

After pressing the **<Enter>** key, the products to be used are set with the numeric keys **<0>** and **<1>**.

- "0" = no vapour recovery required
- "1" = vapour recovery required

6.1.1.1.8 Discharge

Parameter description	Possible content	Security feature
Discharge mode	**NoMix**	Switch
	NoMix & COP-HSV *)	
	COP-HSV *)	
	COP *)	
Discharge on load. side	**Yes**	Switch
	No	
No. of discharges	**2** (1-6)	Switch
No. of A3 discharges	**2** (1-6)	Switch
No. of A1 discharges	**2** (1-6)	Switch
Override mode	**HSV and COP**	Switch
	Only HSV, not COP *)	
	HSV, COP w/o code *)	
	Not allowed	
Override disabeled if HSV activ *)	Yes	Switch
	No	
Override meter with vapour rec. *)	Yes	Switch
	No	
No. of overrides	**2** (1-6)	
Override timeout (Min.)	**60** (10-120)	Switch
Override-Log-Info	**Standard**	Switch
	detailed	
Short override menu	**Yes**	Switch
	No	
Wetleg to dry timeout (Sec.)	**30** (0-60)	Password
Products over meter 1 *)	0000000000000000	Switch
Products over meter 2 *)	0000000000000000	Switch
Vap. rec. at discharge	0000111000000000	Switch

*) parameter not visible or only relevant for German tank trucks

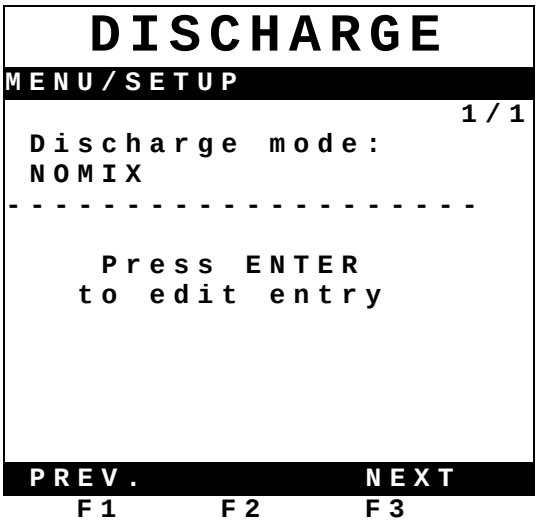

☞ Discharge-specific parameters are set in Discharge setup. The procedure is described in Chapter 6.1.1.1.1 (General procedure).

6.1.1.1.8.1 Discharge mode

possible selection:

NoMix	
QSS	*)
NoMix & QSS-ASS	*)
QSS-ASS	*)

*) only relevant for German tank trucks

- NoMix: Associated with the NoMix device, electronic identification generators are installed at the tank on the petrol station side. They contain an electronic device that stores the respective product quality. These components are called TAGs. With the connection of the product hose of the vapour recovery hose at the tank, the TAGs fitted to the product inlet connector and at the vapour recovery connector are supplied with a small, intrinsically safe voltage via the hoses. The TAG immediately starts transferring the data and information stored internally to the NoMix system installed on the tank truck via the conductive hoses. Provided the connection is correct, the products in the tank truck and the petrol station tanks have been assigned correctly and NoMix has enabled delivery, the tank truck driver can now request product delivery to start.
- QSS: **only relevant for German tank trucks**
- NoMix& QSS-ASS **only relevant for German tank trucks**
- QSS-ASS: **only relevant for German tank trucks**

6.1.1.1.8.2 Delivery on loading side: yes / no

This parameter is used to specify whether delivery via the loading coupling is permitted.

6.1.1.1.8.3 Number of simultaneous deliveries

This parameter is used to specify how many deliveries are permitted at the same time.

6.1.1.1.8.4 Number of simultaneous A3 deliveries

This parameter is used to specify how many hazard class A3 deliveries are permitted at the same time.

6.1.1.1.8.5 Number of simultaneous A1 deliveries

This parameter is used to specify how many hazard class A1 deliveries are permitted at the same time.

6.1.1.1.8.6 Override mode

Possible selection:

- HSV and COP: Override is permitted, COP information is not evaluated, ---> override without cross over prevention.
- only HSV, not COP: **only relevant for German tank trucks**
- HSV and COP without code: **only relevant for German tank trucks**
- not permitted: The override is disabled.

HSV = Hose Super Vision (only used in Germany)

6.1.1.1.8.7 Disable override if HSV is detected: yes / no

Setting = no

only relevant for German tank trucks

6.1.1.1.8.8 Override measuring system with vapour recovery:

Setting = no

only relevant for German tank trucks

6.1.1.1.8.9 Number of simultaneous overrides

This parameter is used to specify how many discharges are permitted in override mode.

6.1.1.1.8.10 Override deactivation time: 10 to 120 min.

A time between 10 and 120 minutes can be selected here. It determines when a discharge started in override mode is terminated again. A override is always reset if the NoMix system is switched off.

6.1.1.1.8.11 Override log info: standard / detailed

- Standard: In override mode, the date, time, compartment no. and product grade are recorded in the log book.
- Detailed: In override mode, in addition to date, time, compartment no. and product grade, the location and reason for the override are also recorded. Location and reason must be entered by the tank truck driver.

6.1.1.1.8.12 Simplified override menu

Setting = yes

The override can be selected without sophisticated safety queries.

6.1.1.1.8.13 Wetleg sensor switch-off time: 0 to 60 seconds.

The time that can be set here specifies the delay time between the time at which the wetleg sensor changes its state from full to empty and the time at which this change is shown in the display.

6.1.1.1.8.14 Products via measuring system 1 / measuring system 2

Setting = 0000000000000000

only relevant for German tank trucks

6.1.1.1.8.15 Vapour recovery during discharge

This parameter is used to specify which products require vapour recovery during discharge.

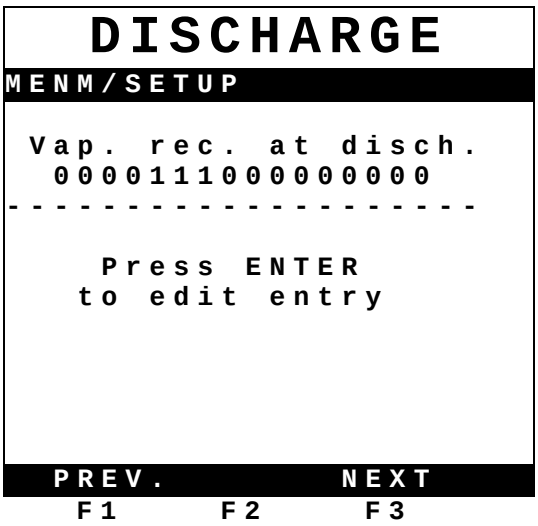

After pressing the **<Enter>** key, products requiring vapour recovery are set with the numeric keys **<0>** and **<1>**.

- "0" = no vapour recovery required
- "1" = vapour recovery required

In the example above, the products 5, 6 and 7 require vapour recovery.

6.1.1.1.9 SPD sensor setup

At SPD sensor setup there are differences concerning the particular software version of the NoMix 2000 main unit and the hardware version of the SPD sensor interface. The configuration no. 4 described below is going to be the standard in the future.

- **Configuration 1**

  Main unit software version < 1.40 and SPD sensor interface part no. MSSPD

  The main unit software version < 1.40 supports only one switch level (analogue break / analogue make).

  The sensor evaluation at the SPD sensor interface part no. MSSPD is done analogue, only one switch level (analogue break / analogue make) is supported.

- **Configuration 2**

  Main unit software version ≥ 1.40 and SPD sensor interface part no. MSSPD

  At main unit software version ≥ 1.40 there are three different analogue switch level adjustable which for instance can be used to detect the opening of the API-coupling at different distances.

  Analogue break 1 / make 1: sensitive; detection after a short opening distance
  Analogue break 3 / make 3: less sensitive; detection after a larger opening distance

  But in combination with SPD sensor interface part no. MSSPD only switch level analogue break 1 / analogue make 1 is supported.

- **Configuration 3**

  Main unit software version < 1.40 and SPD sensor interface part no. MSSPD-N

  The main unit software version < 1.40 supports only one switch level (analogue break / analogue make).

  The sensor evaluation at the SPD sensor interface part no. MSSPD-N is done digital and three different switch level are supported which for instance can be used to detect the opening of the API-coupling at different distances.

  Analogue break 1 / make 1: sensitive; detection after a short opening distance
  Analogue break 3 / make 3: less sensitive; detection after a larger opening distance

  But in combination with main unit software version < 1.40 only switch level analogue break 1 / make 1 is supported.

- **Configuration 4**

  Main unit software version ≥ 1.40 and SPD sensor interface part no. MSSPD-N

  At main unit software version ≥ 1.40 there are three different analogue switch level adjustable which for instance can be used to detect the opening of the API-coupling at different distances.

  Analogue break 1 / make 1: sensitive; detection after a short opening distance
  Analogue break 3 / make 3: less sensitive; detection after a larger opening distance

  The sensor evaluation at the SPD sensor interface part no. MSSPD-N is done digital and three different switch level are supported which for instance can be used to detect the opening of the API-coupling at different distances.

  Analogue break 1 / make 1: sensitive; detection after a short opening distance

Analogue break 3 / make 3: less sensitive; detection after a larger opening distance

☞ The API couplings are adjusted at F.A. Sening according the switch level analogue make 1. Because of that the switch level analogue make 1 should be used starting up the system.

SPD sensors

SPD sensors	Polarity / wire colour (no.) of the connection line		Sensor type
API coupling VKAP100-I2	Wire + Wire -	brown white	Analogue Make
API coupling VKVP-I	Wire + Wire -	brown white	Analogue Make
Foot valve MSDSO	Wire + Wire -	brown white	Analogue Break
Man lid (optional)	Wire + Wire -	brown white	Analogue Make

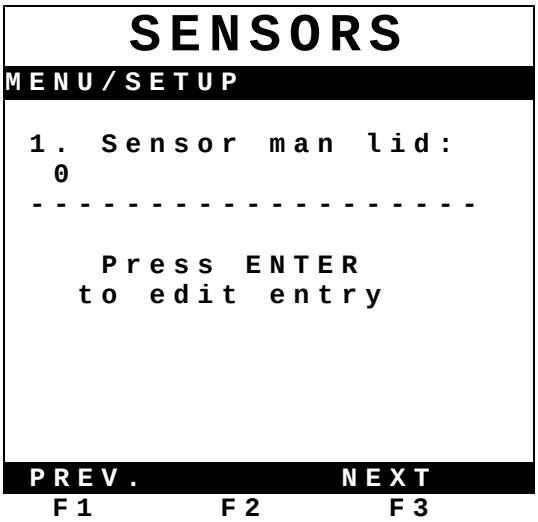

☞ The Sensor setup is used to assign the sensors connected to the SPD sensor interface. The procedure is described in Chapter 6.1.1.1 (General procedure).

☞ If an input channel for the first sensor of a sensor group ("man lid" in the above example) is set to “0” it means that no man lid sensors are installed. This applies for all sensors or sensor groups.

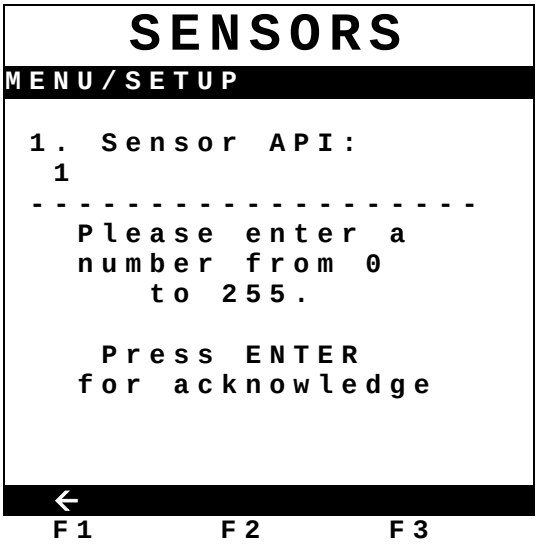

☞ If sensors with a group, in the following example API coupling sensors, are installed, you should first specify which input the first sensor (compartment 1) is connected to, e.g. input "1". The sensors of the remaining compartments are then automatically assigned to the subsequent inputs. Overlapping of different sensor groups must be avoided.

☞ In the next step, the sensor type is entered, see table "SPD sensors" in the table above.

☞ The following sensor types can be selected:

- Digital Break
- Digital Make
- Analogue Break 1
- Analogue Make 1
- Analogue Break 2
- Analogue Make 2
- Analogue Break 3
- Analogue Make 3

The configuration of all sensors is now queried.

1. Filling enable sensor *)
2. Discharge enable sensor *)
3. API coupling sensor
4. Foot valve sensor
5. Line valve sensor *)
6. Man lid sensor
7. Hand brake *)

*) only relevant for German tank trucks

☞ All connected sensors are configured here. The data to be entered here depend on the sensor assignment in the SPD sensor interface.
Please use the **previously filled in** "S.P.D.-sensor assignment" below.

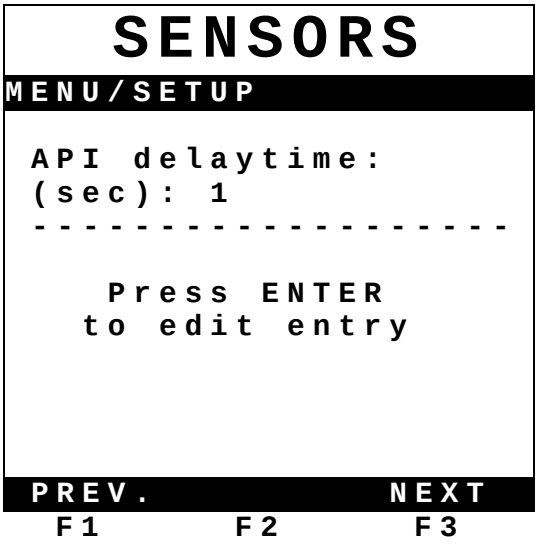

- For the API couplings, an API coupling delay time can additionally be set: 0 to 5 seconds. A setting of 1 second is recommended

Example of an SPD sensor assignment

Example for a 6-compartment tank truck with monitoring of the API couplings and the foot valves.

SPD sensor interface input	Connected sensor / coupling	Tank truck compartment
K1	API coupling (VKAP100-I2)	1
K2	API coupling (VKAP100-I2)	2
K3	API coupling (VKAP100-I2)	3
K4	API coupling (VKAP100-I2)	4
K5	API coupling (VKAP100-I2)	5
K6	API coupling (VKAP100-I2)	6
K7	foot valve (pneumatically operated switch MSDSO)	1
K8	foot valve (pneumatically operated switch MSDSO)	2
K9	foot valve (pneumatically operated switch MSDSO)	3
K10	foot valve (pneumatically operated switch MSDSO)	4
K11	foot valve (pneumatically operated switch MSDSO)	5
K12	foot valve (pneumatically operated switch MSDSO)	6
K13		
K14		
K15		
K16		
K17		
K18		
K19		
K20		

SPD sensor assignment form

SPD sensor interface input	Connected sensor / coupling	Tank truck compartment
K1		
K2		
K3		
K4		
K5		
K6		
K7		
K8		
K9		
K10		
K11		
K12		
K13		
K14		
K15		
K16		
K17		
K18		
K19		
K20		

6.1.1.1.10 Event setup

When setting parameters in the event setup are setup to “Yes” additional events will be recorded in the event logbook. (See also chapter 6.1.1.8.4.2 / other events).

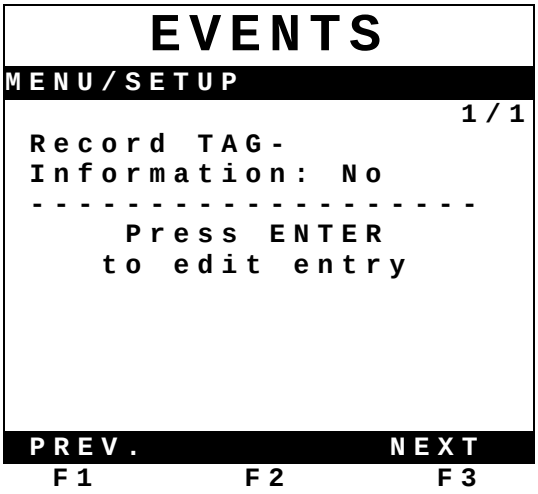

☞ The following parameters can be set in Event setup. The procedure is described in Chapter 6.1.1.1.1 (General procedure).

Parameter description	Possible content	Security feature
Record TAG-Information	Yes	Switch
	No	
Record QS-Information	Yes	Switch
	No	
Record Vapour-Information	Yes	Switch
	No	

6.1.1.1.11 Display interface setup

The display interface is set up independently. To access the setup, the **<F1>** key must be pressed and held when the NoMix system is switched on. This will automatically call up the display setup. Additionally, this menu contains a display and keypad test.

☞ Press **<F1>** to access the SETUP

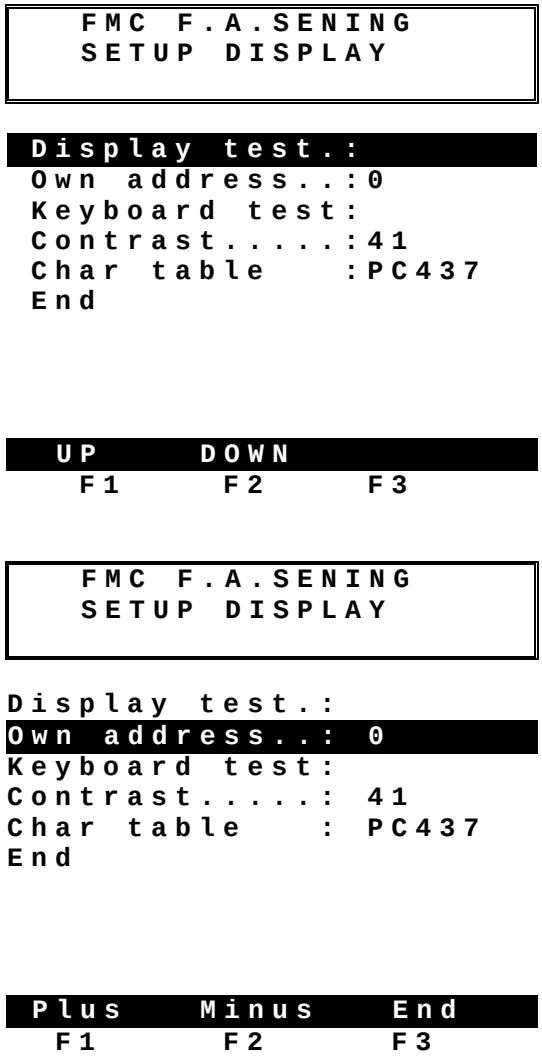

☞ The function keys **<F1>** and **<F2>**, "UP" and "DOWN", are used to select the respective setup test parameter, e.g.: CAN address. Press the **<ENTER>** key to change the parameter; The following display appears.

☞ The **<F1>** and **<F2>** keys, "plus" and "minus" are then used to set the respective CAN address. It is stored with **<F3>** "End".

- Display Interface 1: address 0
- Display Interface 2: address 1
- Display Interface 3: address 2
- Display Interface 4: address 3

Other settings:

- Contrast: 0 to 100
- Font: The selected font must not be changed!

Tests:

- Display test: all ASCII characters are displayed
- Keypad test: any keys that are pressed are shown in the display;
- The keypad test is terminated by pressing the **<ENTER>** key twice

☞ The setup / test is terminated by selecting the line: "End" with the function keys and pressing the **<Enter>** key.

6.1.1.2 Override

The override menu is intended to allow product delivery during an interim period at petrol stations that are not yet equipped or at petrol stations where a fault has occurred. Each activation of an override is recorded in a log book. The following data are stored:

- Date
- Time
- Location (may be activated in SETUP)
- Reason (may be activated in SETUP)
- Compartment no.
- Product grade

6.1.1.2.1 Entering an override

☞ An override is entered as follows:

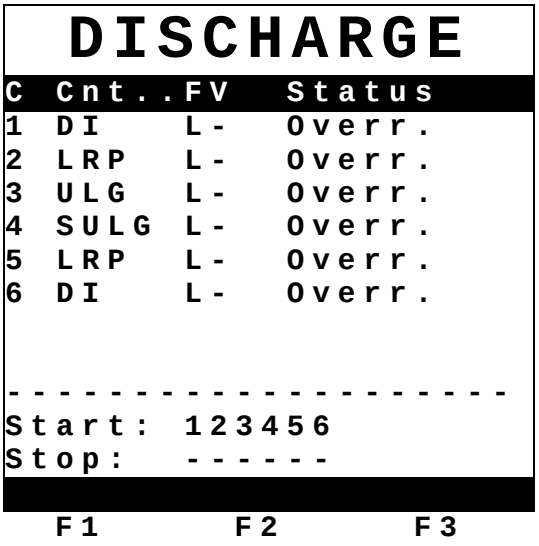

- Press the **<Menu>** key for “main menu”
- Press key **<2>** for "override"
- Confirm override with any key

- Start delivery via the numeric keys

6.1.1.3 Manual input of loading plan

For top loading or uncoded bottom loading, the new loading plan has to be entered as follows:

☞ Entering a loading plan

- Press the **<Menu>** key to access the main menu.
- Press **<3>** for manual loading plan input.
- Change the product grade of compartment 1 and follow the instructions in the display.
- Press **<F3>** for the next compartment and continue as described above. If the product grade does not have to be changed, press **<F3>**directly to access the next compartment.
- Once the loading plan is complete, press **<F1>** 3 times to save the loading plan and to exit the loading plan and the main menu.

6.1.1.4 NoMix 2000 log book

The NoMix 2000 log book is an electronic memory that can store data that in some way deactivate or influence the NoMix monitoring functions (e.g. hardware fault, override, manual input of the loading plan, change-over of date and time…). These actions can then be viewed sequentially by date under a consecutive number via the log book function. The log book can only be viewed, it cannot be deleted. Once the log book has reached the maximum number of entries, the first entry will be overwritten during the next action.
(ring buffer).

Example of a log book display:

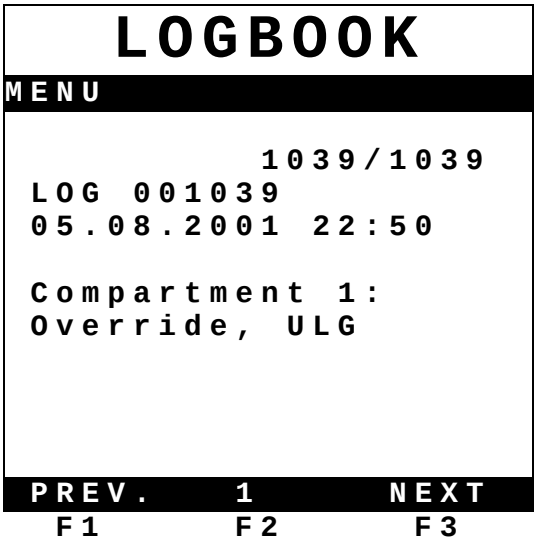

The F1 or F2 keys can be used to scroll through the log book (backward or forward).
The increment size for scrolling through the log book can be changed with the Enter key. Pressing the Enter key once sets an increment of 10, pressing it twice sets an increment of 100, pressing it three times of sets an increment of 1000, pressing it four times returns to an increment of 1.

The display mentioned above indicates that, on 05.08.2001 at 22:50, an override of compartment 1 was activated to deliver the product "ULG".

Pressing the **<STOP>** key takes you back to the main menu.

6.1.1.5 Event log book

The event log book stores all events concerning the SPD functionality, such as:

- Opening / closing of the API couplings
- Opening / closing of the foot valves
- Wetleg sensor changes
- Starting or stopping of loading / discharge
- etc.

The configuration is identical to Chapter 6.1.1.4.

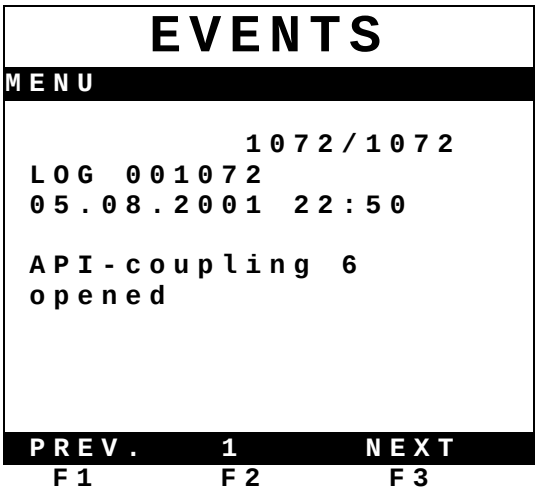

The display mentioned above indicates that, on 05.08.2001 at 22:50, the API coupling of compartment 6 was opened.

☞ Pressing the **<STOP>** key takes you back to the main menu.

6.1.1.6 Date / time

The submenu for setting of the date and time is reached from the main menu. Any change of the date or the time is recorded in the NoMix 2000 log book.

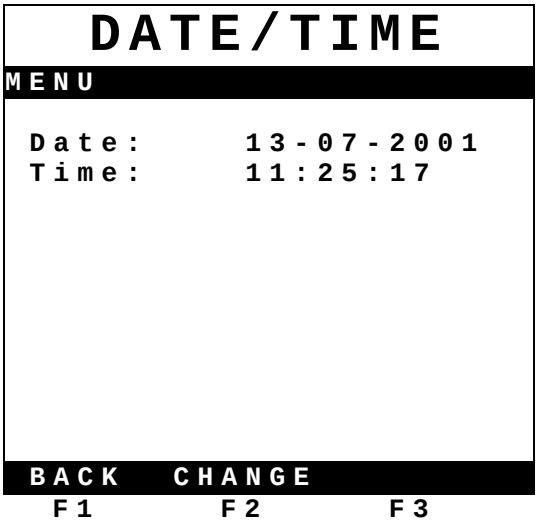

☞ Follow the display instructions for setting the date and time. Then enter the date and time via the numeric keys. After the day has been entered, e.g.: "12", the cursor automatically jumps to the month etc.

6.1.1.7 Test menu

The test menu enables comprehensive tests of the NoMix 2000 system modules to be carried out.

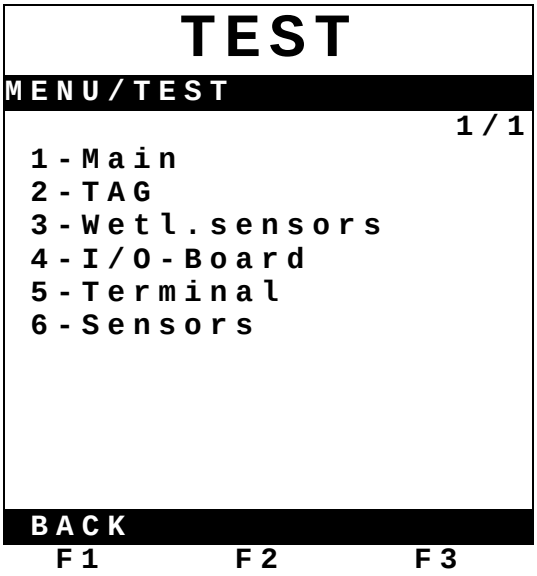

☞ The relevant submenu is accessed by pressing the number preceding the respective function.

6.1.1.7.1 Main Unit Test

Depending of the hardware version different variants are displayed.
Hardware version 1.00 correspond to the original Main Unit CPU-Board, predominantly used in Main Unit, part no. NM2MAIN, Hardware version 2 correspond to the Main Unit –Board used in Main Unit / Display, part no. NM2MAINDISP (se also chapter 3.1.3)

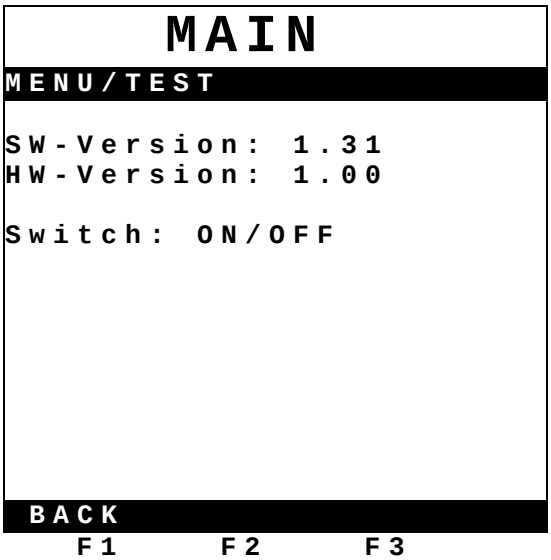

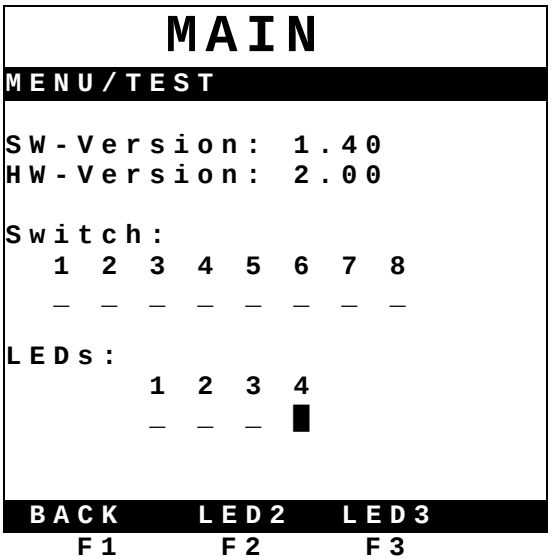

Note to hardware version 2.00:

- The setup switch is dipswitch no. 8 (see also drawing no. E51.351675)
- Numbering of the LEDs:
  1 = Setup-Switch (red)
  2 & 3 = software controlled (green)
  4 = Power indication (always lighting) (green)

6.1.1.7.2 TAG test

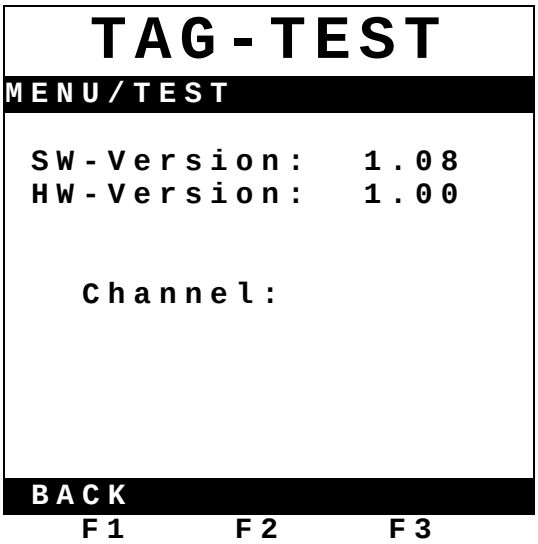

☞ Enter the scan line no. via the numeric keys and confirm with <ENTER>.

The TAG scan lines are arranged as follows:

- TAG scan 1: Tank truck with direct discharge, compartment 1
- TAG scan 2: Tank truck with direct discharge, compartment 2
- TAG scan 3: Tank truck with direct discharge, compartment 3
- TAG scan 4: Tank truck with direct discharge, compartment 4
- TAG scan 5: Tank truck with direct discharge, compartment 5
- TAG scan 6: Tank truck with direct discharge, compartment 6

- TAG scan 7: tank truck measuring systems, measuring system 1 *)
- TAG scan 8: tank truck measuring systems, measuring system 2 *)

- TAG scan 9: 2" vapour recovery 1 *)
- TAG scan 10: 2" vapour recovery 2 *)
- TAG scan 11: 2" vapour recovery 3 *)
- TAG scan 12: 2" vapour recovery 4 *)
- TAG scan 13: 3" / 4" common vapour recovery

- TAG scan 14: for expansion

*) only relevant for German tank trucks

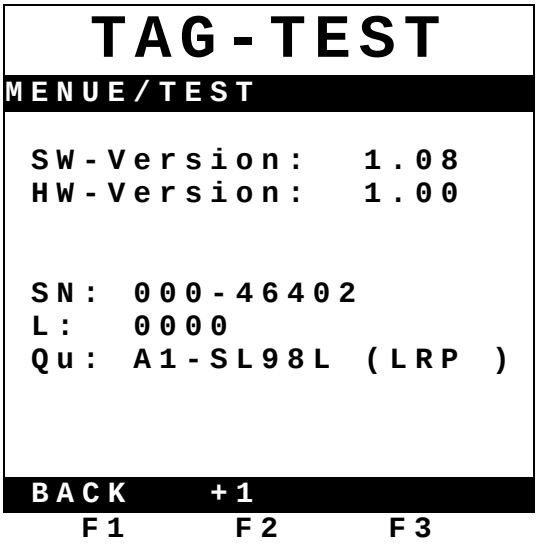

The information readable on the display:

SN:	000-	The TAG manufacturer is F.A. Sening
46402		The TAG serial no. is: 46402
L:	0000:	only relevant for German tank trucks
Qu:	A1-SL98L:	The product grade is: A1 product
SL98L:	grade	Super Leaded 98 octane (LRP)

TAG qualities (Texaco UK):

Display	Product grade	Petrol station TAG		Depot TAG	
		Product	Vapour Recovery	Product	Vapour Recovery
DI	Diesel	A3-SL68	-	A3-DL68	-
LRP	LRP (4 Star)	A1-SL98L	-	A1-DL98L	-
ULG	Unleaded 95	A1-SL95U	-	A1-DL95U	-
SULG	Super Unleaded 98	A1-SL98U	-	A1-DL98U	-
			A1-SVCM A1 Common Vapour		CM-DVCM A1/A3 Common Vapour

☞ The next scan line is accessed via the **<F2>** key.

6.1.1.7.3 Wetleg sensor test

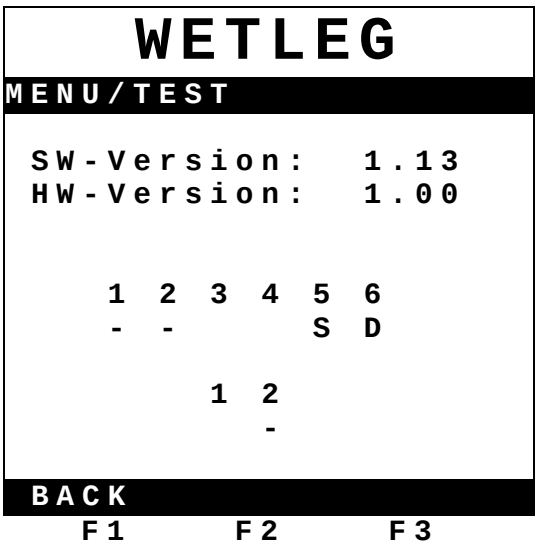

☞ Carry out the wetleg sensor test for all compartments. The display for the wetleg sensors of the respective compartment means:

- **-** : Compartment state = empty
- : Compartment state = filled, not empty compartment
- **S** : Short circuit in the sensor or in the sensor cable
- **D** : Interruption in the sensor or in the sensor cable.

The display for the two intrinsically safe inputs means:

- **-** : Input open, not active
- : Input closed, active

✍ When the setup is released by the setup switch a disconnected wetleg sensor is taken as a compartment state filled. This is helpful for testing the loading functionality without having product. Therefore connect the respective compartment to the test unit. After disconnecting the wetleg sensor connector the loading plan will change to the connected product grade.

6.1.1.7.4 I/O interface test

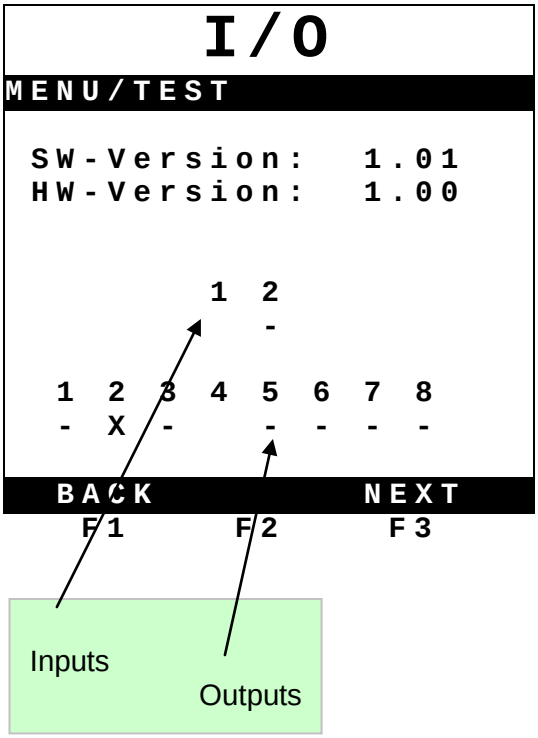

☞ Via the I/O interface test, the inputs and solenoid valve outputs can be checked.

- **-** : input / output is inactive
- : input / output is active
- **X** : Not empty compartment

The respective outputs / solenoid valves are switched on and off again via the numeric keys 1 to 8. Currently, only one solenoid valve output can be tested at a time.

✍ **The outputs only can be tested when the setup switch is released.**

If a second I/O interface is installed, the second interface must be activated with the **<F3>** key for the test to be carried out.

6.1.1.7.5 Keypad test

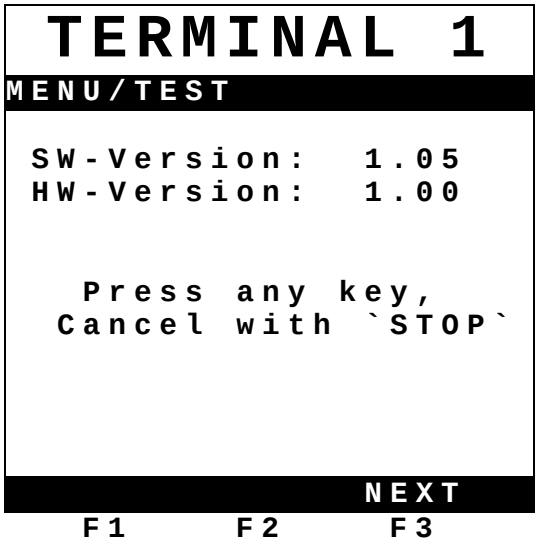

☞ This test menu is used for carrying out the keypad test. The currently pressed key appears in the display. The LCD test is carried out according to Chapter 6.1.1.1.11 in the setup menu of the display interface. If two display interfaces are installed, the test menu for the second display interface is accessed by pressing the **<F3>** key.

6.1.1.7.6 SPD sensor test

The SPD sensor test is described below:

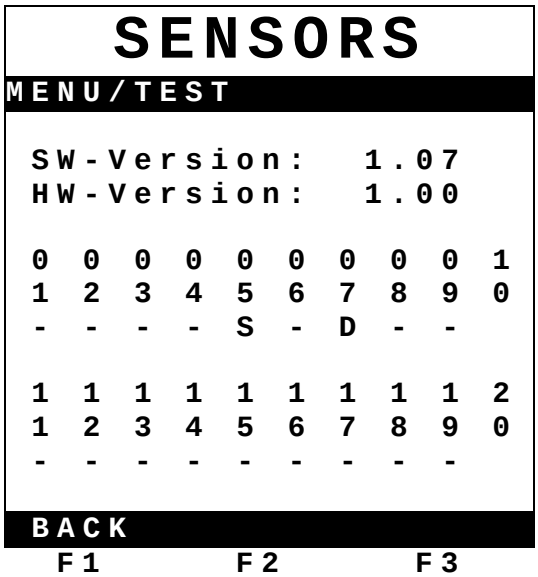

The display may show:

- **-** : sensor not active, (e.g. coupling closed)
- ** ** : sensor active, (e.g. coupling open)
- **S** : sensor short circuit
- **D** : sensor disconnected /interruption

☞ Activate the respective sensors for each compartment in turn by opening the valves or by supplying compressed air to the pressure switches.

☺ The switch statuses shown on the display should change

from „-“ to „ “

The input to which the tested sensor is connected is also shown (input K1 to K20).

☍ If the pneumatically operated switches for the foot valve cannot be pressurised in the test menu, normal loading or discharge may be carried out. The event log book should then be checked to verify whether all foot valves were opened and shut again.

6.1.1.7.7 CAN bus test

In case of serious faults in the communication to one or several interface modules, the CAN bus test is designed to switch off all interface modules with the exception of the display interface. This is done in Components setup. At the same time, the interface module that was switched off in the Component setup must also be physically separated from the CAN bus. To this end, the four cables for battery supply and CAN bus coming from the sealed power supply have to be disconnected at the terminal blocks.

6.1.1.8 Print Menu

If the NoMix 2000 System is connected to a printer / laptop, the print menu can be called up by pressing the <**Print**> key.

The following message is displayed.

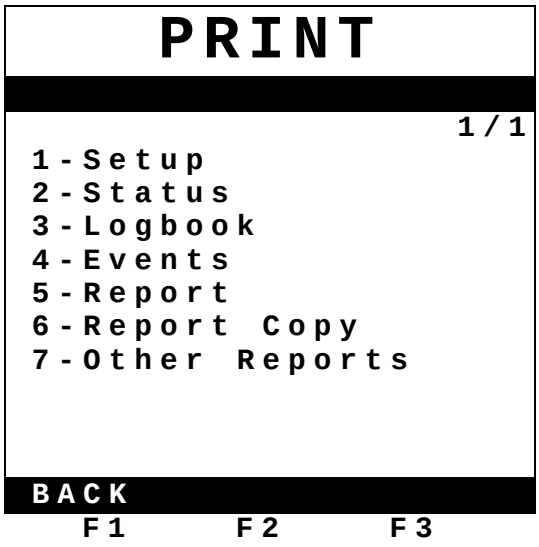

☞ You can get into the sub-menus by pressing the number key that precedes the function.

6.1.1.8.1 Setup

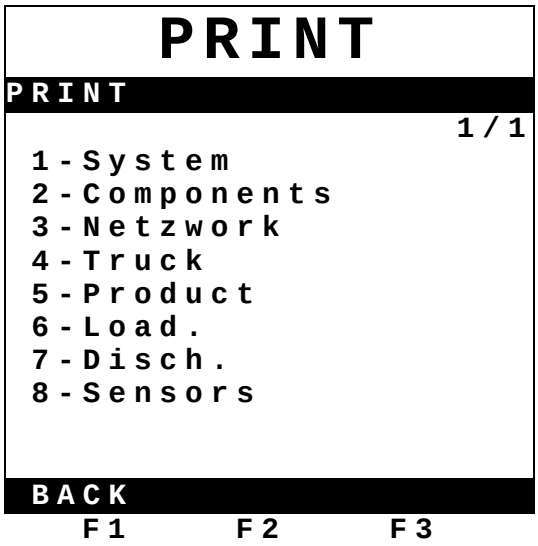

☞ You can start the printout of sub-menus by pressing the number key that precedes the sub-menu.

6.1.1.8.2 Status

☞ To start the status report printout you have to press the key **<2>**. Immediately the printout of the status report starts.

The status report contains the particular seal conditions of the individual compartments.

- Status report number
- Software version of NoMix 2000 Main Unit
- Date of printout
- Time of printout
- Series number of NoMix 2000 Main Unit
- Sealed compartments: date and time of sealing
- Manual sealed compartments: date and time of sealing at loading
- Manual sealed compartments: date and time of sealing at discharge
- Unsealed compartments: date and time of unsealing, event which causes the unsealing

6.1.1.8.2.1 Status report before loading (Example)

Status report printout	Explanation
Statusrep. No. 000005 **NoMix 2000 Ver. 1.32 11.11.2002** **S/N: 000001 14:25:27** **----------**	Heading with report no., Main Unit software version no. and series no., Date and Time of printout.
Compartment 1: LRP **EMPTY 17.09.2002 13:40**	Product grade Compartment 1 = LRP Status Compartment 1= Empty, Date/Time
Compartment 2: DI **EMPTY 17.09.2002 13:40**	Product grade Compartment 2 = DI Status Compartment 2 = Empty, Date/Time
Compartment 3: LRP **EMPTY 17.09.2002 13:41**	Product grade Compartment 3 = LRP Status Compartment 3 = Empty, Date/Time
Compartment 4: ULG **EMPTY 17.09.2002 13:41**	Product grade Compartment 4 = ULG Status Compartment 4 = Empty, Date/Time
Compartment 5: LRP **EMPTY 17.09.2002 13:41**	Product grade Compartment 5 = LRP Status Compartment 5 = Empty, Date/Time
Compartment 6: DI **EMPTY 17.09.2002 13:41**	Product grade Compartment 6 = DI Status Compartment 6= Empty, Date/Time
--- End of print ---	

6.1.1.8.2.2 Status report after loading / before discharge (Example)

Status report printout	Explanation
Statusrep. No. 000006 **NoMix 2000 Ver. 1.32 11.11.2002** **S/N: 000001 14:28:54** **----------**	Heading with report no., Main Unit Software version no. and series no., Date and Time of printout.
Compartment 1: LRP **SEALED 11.11.2002 14:28**	Product grade Compartment 1 = LRP Status Compartment 1 = Sealed, Date/Time
Compartment 2: DI **SEALED 11.11.2002 14:28**	Product grade Compartment 2 = DI Status Compartment 2 = Sealed, Date/Time
Compartment 3: LRP **SEALED 11.11.2002 14:28**	Product grade Compartment 3 = LRP Status Compartment 3 = Sealed, Date/Time
Compartment 4: ULG **SEALED 11.11.2002 14:28**	Product grade Compartment 4 = ULG Status Compartment 4 = Sealed, Date/Time
Compartment 5: LRP **SEALED 11.11.2002 14:28**	Product grade Compartment 5 = LRP Status Compartment 5 = Sealed, Date/Time
Compartment 6: DI **SEALED 11.11.2002 14:28**	Product grade Compartment 6 = DI Status Compartment 6 = Sealed, Date/Time
--- End of print ---	

6.1.1.8.2.3 Status report, other possible compartment status entries (Example)

Status report printout	Explanation
Statusrep. No. 000008 **NoMix 2000 Ver. 1.32 11.11.2002** **S/N: 000001 14:43:13** **----------**	Heading with report no., Main Unit Software version no. and series no., Date and Time of printout.
Compartment 1: LRP **SEALED 11.11.2002 14:41**	Product grade Compartment 1 = LRP Status Compartment 1 = Sealed, Date/Time
Compartment 2: DI **MAN.LOAD.SEAL 11.11.2002 14:41**	Product grade Compartment 2 = DI Manual Seal at Loading, Date/Time
Compartment 3: LRP **MAN.DEL.SEAL 11.11.2002 14:41**	Product grade Compartment 3 = LRP Manual Seal at Discharge, Date/Time
Compartment 4: ULG **UNSEALED 11.11.2002 14:42** **API-Coupling 4: Opened** **11.11.2002 14:42**	Product grade Compartment 4 = ULG Status Compartment 4 = Unsealed, Date/Time, Reason for Unsealing: API-Coupling Compartment 4 was opened, Date/Time
Compartment 5: LRP **EMPTY 11.11.2002 14:42**	Product grade Compartment 5 = LRP Status Compartment 5 = Empty, Date/Time
Compartment 6: DI **SEALED 11.11.2002 14:41**	Product grade Compartment 6 = DI Status Compartment 6 = Sealed, Date/Time
--- End of print ---	

6.1.1.8.3 Logbook

☞ To start the Logbook printout you have to press the key **<3>**.
The following message is displayed.

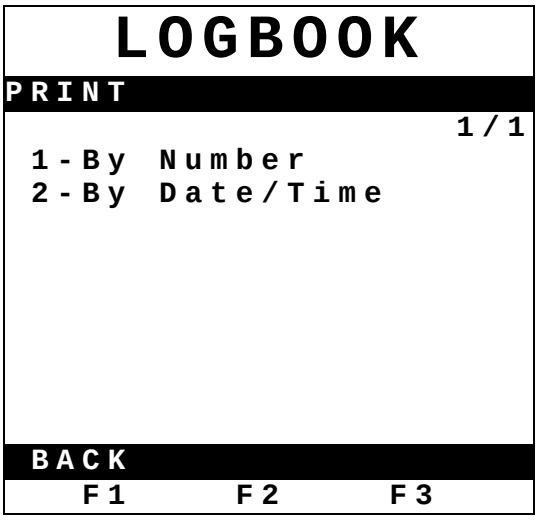

1 - Printout of Logbook entries by number.

2 - Printout of Logbook entries by date/time.

☞ After pressing key **<1>** enter a start number and an end number.

- Enter the start logbook number using the **<numeric keys>.**
- Press **<ENTER>** for acknowledge.
- Enter the end logbook number using the **<numeric keys>.**
- Press **<ENTER>** for acknowledge.
- Press **<F1>** „BACK“, for correction.
- Press **<F3>** „PRINT“, to start the printout

☞ After pressing key **<2>** enter a period from start date / time to end date / time.

- Enter the start date using the **<numeric keys>.**
- Press **<ENTER>** for acknowledge.
- Enter the start time using the **<numeric keys>.**
- Press **<ENTER>** for acknowledge.
- Enter the end date using the **<numeric keys>.**
- Press **<ENTER>** for acknowledge.
- Enter the end time using the **<numeric keys>.**
- Press **<ENTER>** for acknowledge.
- Press **<F1>** „BACK“, for correction.
- Press **<F3>** „PRINT“, to start the printout

6.1.1.8.3.1 Logbook Printout (Example)

Logbook Printout	Explanation
Logbook **NoMix 2000 Ver. 1.32 12.11.2002** **S/N: 000001 13:55:37** **----------**	Heading with Main Unit Software version no. and series no., Date and Time of printout
000001 12.11.2002 13:54 **Hardware defect** **Logbook** **Recording gaps**	Defect / fault on EEPROM (storage of logbook) on main unit CPU-board
000002 12.11.2002 13:54 **Hardware defect** **Real time clock** **Internal error**	Defect / fault on real time clock circuit on main unit CPU-board
000003 12.11.2002 13:54 **Hardware defect** **Loadingplan** **Inv.Content/Checksum**	Defect / fault on battery buffered RAM (storage of Loading plan) on main unit CPU-board. Ribbon cable between power supply and CPU-board was disconnected
LOG 004803 12.11.2002 13:50 **Hardware defect** **EMIS switched off**	No communication to EMIS Interface
LOG 004804 12.11.2002 13:50 **Hardware defect** **Stack Overflow**	Defect / fault on main unit CPU-board
LOG 004808 12.11.2002 13:50 **No Response:** **Restm.-Sensor 1**	No communication to wetleg sensor interface 1
LOG 004816 12.11.2002 13:51 **No Response:** **Sensor IF 1**	No communication to SPD sensor interface 1
LOG 004821 12.11.2002 13:51 **No Response:** **Terminal 1**	No communication to display interface 1
LOG 004822 12.11.2002 13:51 **No Response: Valve Driver 1**	No communication to I/O interface 1
LOG 004755 12.11.2002 10:14 **Compartment 5: DI** **Input L-Plan: LRP**	Hand input of loading plan, change from DI to LRP for compartment 5
LOG 004756 12.11.2002 10:14 **Compartment 5: Override, DI**	Compartment 5, DI was discharged with the Override functionality, no COP
LOG 004757 12.11.2002 10:14 **Empt. Over.**	The compartment empty test was overridden
LOG 004757 12.11.2002 10:14 **Inp. Date/time**	The date was changed to: 21.08.2003 The time was changed to: 07:16:00

```
Date: 21-08-2003
Time: 07:16:00

--- End of Print ---
```

6.1.1.8.4 Events

☞ To start the event printout you have to press the key **<4>**.
The following message is displayed.

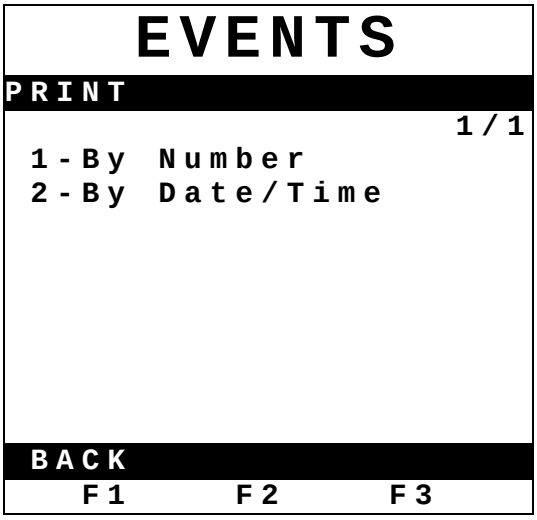

1 - Printout of Logbook entries by number.

2 - Printout of Logbook entries by date/time.

☞ The printout has to be done according to chapter 6.1.1.8.3 (Logbook printout).

6.1.1.8.4.1 Printout of Events (Example)

Below an event printout of a discharge and a loading is shown for only one compartment.

6.1.1.8.4.1.1 Discharge (Example)

Discharge: (Begin)

Event Printout	Explanation
Event rep. **NoMix 2000 Ver. 1.40 12.11.2002** **S/N: 000001 13:55:37** **----------**	Heading with Main Unit Software version no. and series no., Date and Time of printout
LOG 004486 11.11.2002 14:28 **Operation mode: Menu**	**<Print>** key pressed, --> Print Menu
LOG 004487 11.11.2002 14:28 **Statusreport No. 000006 printed**	Status report no. 6 was printed
LOG 004490 11.11.2002 14:29 **Operation mode: Status**	Print Menu was left → Status screen
LOG 004491 11.11.2002 14:29 **Air Pressure: High**	Main air pressure switch was activated
LOG 004492 11.11.2002 14:29 **Operation mode: Discharge**	**<F3>** key for discharge pressed, discharge mode
LOG 004493 11.11.2002 14:29 **Magnetvalve 8: Aktiv**	Discharge release Magnet valve 8 was activated
LOG 004494 11.11.2002 14:29 **Loading Plan** **1:S 2:S 3:S 4:S 5:S 6:S** **DI LRP ULG SULG DI LRP**	Loading Plan before discharge, all compartments sealed (S)
LOG 004495 11.11.2002 14:30 **Compartment 1: Discharge Ready** **Connected: DI**	Compartment 1 connected to a DI station tank, → discharge ready.
LOG 004496 11.11.2002 14:30 **Compartment 1: Discharge Started**	Compartment 1 discharge started
LOG 004497 11.11.2002 14:30 **Magnetvalve 1: Aktiv**	Magnet valve compartment 1 activated, → discharge started
LOG 004498 11.11.2002 14:30 **API-Coupling 1: Opened**	API-Coupling compartment 1 opened
LOG 004499 11.11.2002 14:30 **Compartment 1: Unsealed**	Compartment 1 unsealed
LOG 004500 11.11.2002 14:30 **Bottomvalve 1: Opened**	Footvalve compartment 1 was opened

LOG 004514 11.11.2002 14:30 **Wet.Sensor 1: Dry**	Wetleg sensor compartment 1 changed from wet condition to dry condition
LOG 004515 11.11.2002 14:30 **Compartment 1: Empty**	Compartment 1 declared to empty
LOG 004521 11.11.2002 14:30 **Compartment 1: Discharge Stopped**	Discharge of compartment 1 stopped at the display interface
LOG 004522 11.11.2002 14:30 **Magnetvalve 1: Passiv**	Magnet valve compartment 1 deactivated,→ discharge stopped
LOG 004523 11.11.2002 14:30 **Compartment 1: Discharge Disconn.**	Product hose compartment 1 disconnected
LOG 004524 11.11.2002 14:30 **Bottomvalve 1: Closed**	Footvalve compartment 1 was closed
LOG 004525 11.11.2002 14:30 **API-Coupling 1: Closed**	API-Coupling compartment 1 closed
LOG 004526 11.11.2002 14:31 **Magnetvalve 8:: Passiv**	Discharge release Magnet valve 8 was deactivated
LOG 004556 11.11.2002 14:31 **Operation mode: Menu**	**<Print>** key pressed --> Print Menu
LOG 004557 11.11.2002 14:31 **Statusreport No. 000007 printed**	Status report no. 7 was printed
LOG 004558 11.11.2002 14:32 **Worksheet No. 000005 printed**	Worksheet no. 5 was printed

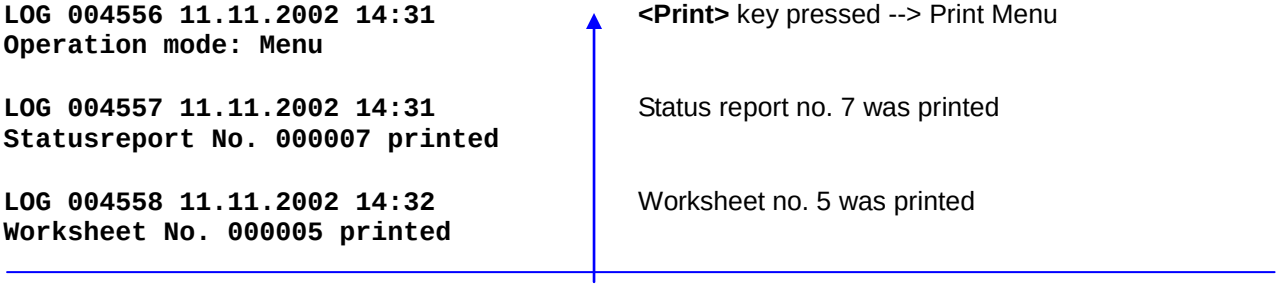

End of Discharge

6.1.1.8.4.1.2 Loading (Example)

Loading: (Begin)

Event Printout	Explanation
Event rep. **NoMix 2000 Ver. 1.40 12.11.2002** **S/N: 000001 13:55:37** **----------**	Heading with Main Unit Software version no. and series no., Date and Time of printout
LOG 004459 11.11.2002 14:28 **Operation mode: Menu**	**<Print>** key pressed --> Print Menu
LOG 004460 11.11.2002 14:28 **Statusreport No. 000008 printed**	Status report no. 8 was printed
LOG 004461 11.11.2002 14:29 **Operation mode: Status**	Print Menu was left → Status screen
LOG 004562 11.11.2002 14:39 **Air Pressure: High**	Main air pressure switch was activated
LOG 004563 11.11.2002 14:39 **Operation mode: Loading**	**<F1>** key for loading pressed, loading mode
LOG 004564 11.11.2002 14:39 **Magnetvalve 7: Aktiv**	Loading release Magnet valve 7 was activated
LOG 004565 11.11.2002 14:39 **Loading Plan** **1:E 2:E 3:E 4:E 5:E 6:E** **DI LRP ULG SULG DI LRP**	Loading Plan before loading, all compartments empty
LOG 004566 11.11.2002 14:39 **Compartment 1: Loading Ready** **Connected: DI**	Compartment 1 connected to a DI loading arm → loading ready.
LOG 004567 11.11.2002 14:40 **API-Coupling 1: Opened**	API-Coupling compartment 1 opened
LOG 004568 11.11.2002 14:40 **Compartment 1: Loading Started**	Compartment 1 loading started
LOG 004569 11.11.2002 14:40 **Magnetvalve 1: Aktiv**	Magnet valve compartment 1 activated, → loading started
LOG 004570 11.11.2002 14:40 **Bottomvalve 1: Opened**	Footvalve compartment 1 was opened
LOG 004597 11.11.2002 14:40 **Wet.Sensor 1: Wet**	Wetleg sensor compartment 1 changed from dry condition to wet condition
LOG 004598 11.11.2002 14:40 **Compartment 1: Not Empty**	Compartment 1 declared to not empty
LOG 004599 11.11.2002 14:30	Loading of compartment 1 stopped

Compartment 1: Loading Stopped	at the display interface
LOG 004600 11.11.2002 14:30 **Magnetvalve 1: Passiv**	Magnet valve compartment 1 deactivated,→ loading stopped
LOG 004601 11.11.2002 14:41 **Bottomvalve 1: Closed**	Footvalve compartment 1 was closed
LOG 004602 11.11.2002 14:41 **API-Coupling 1: Closed**	API-Coupling compartment 1 closed
LOG 004627 11.11.2002 14:41 **Compartment 1: Loading Disconn.**	Loading arm compartment 1 disconnected
LOG 004631 11.11.2002 14:41 **Compartment 1: Seal set**	Compartment 1 is electronically sealed
LOG 004644 11.11.2002 14:41 **Magnetvalve 7:: Passiv**	Loading release Magnet valve 7 was deactivated
LOG 004645 11.11.2002 14:41 **Operation mode: Status**	Change to → Status screen
LOG 004646 11.11.2002 14:39 **Operation mode: Menu**	**<Print>** key pressed --> Print Menu
LOG 004647 11.11.2002 14:43 **Statusreport No. 000009 printed**	Status report no. 9 was printed

End of Loading

6.1.1.8.4.2 Other Events

Event Printout	Explanation
LOG 004393 11.11.2002 14:22 **Power On**	The NoMix 2000-System power from the truck battery was switched On
LOG 004396 11.11.2002 14:22 **Power Off**	The NoMix 2000-System power from the truck battery was switched Off
LOG 004397 11.11.2002 14:22 **Setupswitch On**	The NoMix 2000-Setup was released by activating the setup switch
LOG 004398 11.11.2002 14:22 **Setupswitch Off**	The NoMix 2000-Setup was locked by deactivating the setup switch
LOG 004399 11.11.2002 14:22 **Setup changed:** **Manual loading plan** **Allowed: Yes**	The hand input loading plan was released by setup change
LOG 004400 11.11.2002 14:22 **Setup changed:**	The hand input loading plan was locked by setup change

Manual loading plan **Allowed: No**	
LOG 004401 11.11.2002 14:22 **Setup changed:** **Override Mode:** **HSV and COP**	The override mode for discharge was released by setup change
LOG 004402 11.11.2002 14:22 **Setup changed:** **Override Mode:** **Not allowed**	The override mode for discharge was locked by setup change
LOG 004403 11.11.2002 14:22 **TAG 5: A1-DL95U (ULG)**	At compartment no. 5 an unleaded 95 octane depot TAG (ULG) was connected
LOG 004404 11.11.2002 14:22 **TAG 5: No Code**	At compartment no. 5 an unleaded 95 octane depot TAG (ULG) was disconnected
LOG 004405 11.11.2002 14:22 **TAG 13: CM-DVCM**	At TAG scan line 13 (3” vapour) a depot common vapour TAG was connected
LOG 004406 11.11.2002 14:22 **TAG 13: No Code**	At TAG scan line 13 (3” vapour) a depot common vapour TAG was disconnected
LOG 004407 11.11.2002 14:22 **TAG 5: A1-SL95U (ULG)**	At compartment no. 5 an unleaded 95 octane station TAG (ULG) was connected
LOG 004408 11.11.2002 14:22 **TAG 5: No Code**	At compartment no. 5 an unleaded 95 octane station TAG (ULG) was disconnected
LOG 004409 11.11.2002 14:22 **TAG 13: A1-SVCM**	At TAG scan line 13 (3” vapour) a station common vapour TAG was connected
LOG 004410 11.11.2002 14:22 **TAG 13: No Code**	At TAG scan line 13 (3” vapour) a station common vapour TAG was disconnected
LOG 004394 11.11.2002 14:22 **Air Pressure:** **High**	Main air pressure switch was activated
LOG 004395 11.11.2002 14:22 **Air Pressure:** **Low**	Main air pressure switch was deactivated

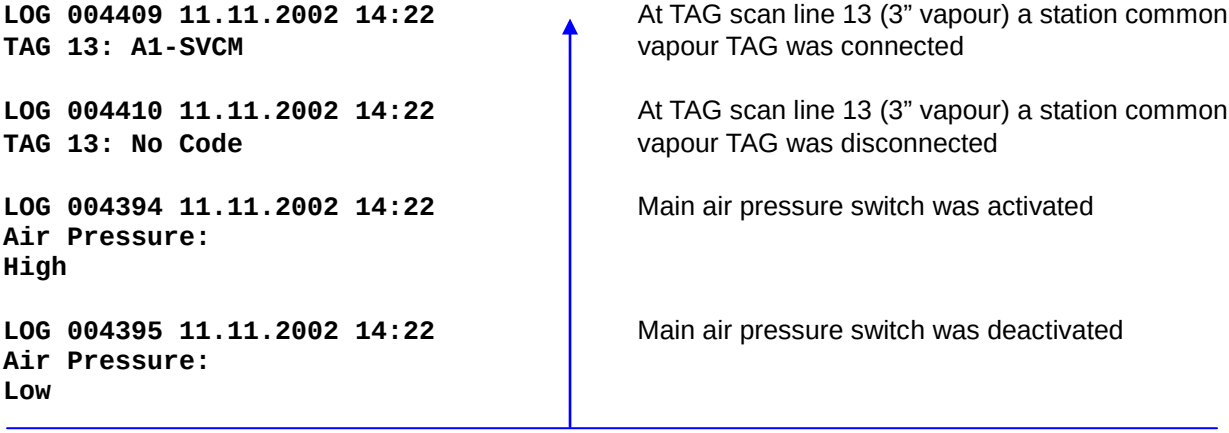

6.1.1.8.5 Reports (Worksheet)

☞ To start the worksheet report printout you have to press the key **<5>**. Immediately the printout of the report starts.

☍ All reports that have taken place after the last printout will be printed. In this manner it is possible to create a complete tour or shift report.

6.1.1.8.5.1 Report of a Loading and Discharge (Example)

Loading: (Begin)

Report Printout	Explanation

`Worksheet. No. 000005`
`NoMix 2000 Ver. 1.40 11.11.2002`
`S/N: 000001 14:32:07`
`----------`
	Heading with worksheet no., Main Unit Software version no. and series no., Date and Time of printout

`_____ _____` `Truck Sign`	Hand written truck identification, e.g. number plate, sign of the driver

`----------`
`L o a d i n g`
`----------`	

`Begin: 11.11.2002 14:26 004406` `End: 11.11.2002 14:28 004483`	Begin of loading, date/time, log. No. End of loading, date/time, log. No.

`1:E 2:E 3:E 4:E 5:E 6:E`
`LRP LRP ULG DI DI LRP`
`..........`
	Compartment state before loading: E = empty
	Loading plan before loading

`Comp. 1, LRP: Connected: DI` `14:27-14:28 Not empty`	Coded loading, change from LRP to DI Loading time compartment 1, state: not empty
`Comp. 2, LRP: Connected: ULG` `14:27-14:28 Not empty`	Coded loading, change from LRP to ULG Loading time compartment 2, state: not empty
`Comp. 3, ULG: Connected: LRP` `14:27-14:28 Not empty`	Coded loading, change from ULG to LRP Loading time compartment 3, state: not empty
`Comp. 4, DI: Connected: ULG` `14:27-14:28 Not empty`	Coded loading, change from DI to ULG Loading time compartment 4, state: not empty
`Comp. 5, DI: Connected: LRP` `14:27-14:28 Not empty`	Coded loading, change from DI to LRP Loading time compartment 5, state: not empty

`Comp. 6, LRP: Connected: DI`
`14:28-14:28 Not empty`
`..........`
	Coded loading, change from LRP to DI
	Loading time compartment 6, state: not empty

`1:S 2:S 3:S 4:S 5:S 6:S` `DI ULG LRP ULG LRP DI`	Compartment state after loading: S = Sealed Loading plan after loading

`----------`
`D i s c h a r g e`
`----------`	

`Begin: 11.11.2002 14:29 004493` `End: 11.11.2002 14:31 004554`	Begin of discharge, date/time, log. No. End of discharge, date/time, log. No.

`1:S 2:S 3:S 4:S 5:S 6:S`
`DI ULG LRP ULG LRP DI`
`..........`
	Compartment state before discharge: S = Sealed
	Loading plan before discharge

`Comp. 1, DI: Connected: DI` `14:30-14:30 Empty`	Coded discharge compartment 1, (DI) Discharge time compartment 1, state: empty
`Comp. 2, ULG: Connected: ULG` `14:30-14:30 Empty`	Coded discharge compartment 2, (ULG) Discharge time compartment 2, state: empty

Comp. 3, LRP:	**Connected: LRP**	Coded discharge compartment 3, (LRP)
14:30-14:30	**Empty**	Discharge time compartment 3, state: empty
Comp. 4, ULG	**Connected: ULG**	Coded discharge compartment 4, (ULG)
14:30- 14:31	**Empty**	Discharge time compartment 4, state: empty
Comp. 5, LRP:	**Connected: LRP**	Coded discharge compartment 5, (LRP)
14:31-14:31	**Empty**	Discharge time compartment 5, state: empty
Comp. 6, DI:	**Connected: DI**	Coded discharge compartment 6, (DI)
14:31-14:31	**Empty**	Discharge time compartment 6, state: empty
.....		
1:L 2:L 3:L 4:L 5:L 6:L		Compartment state after discharge: E = empty
DI ULG LRP ULG LRP DI		Loading plan after discharge
--- End of Printout ---		

End of Discharge

6.1.1.8.5.2 Additional Compartment States

Report Printout	Explanation
1:E 2:L 3:R 4:S 5:SL 6:SD **LRP DI ULG SULG LRP DI**	The following compartment states can be displayed: Comp. 1 = **E**: Empty Compartment Comp. 2 = **L**: Loaded, not sealed Compartment Comp. 3 = **R**: Rest volume in the pipe system Comp. 4 = **S**: Sealed (loaded) Compartment Comp. 5 = **SL**:Hand sealed (loaded) Compartment Seal at Loading Comp. 6 = **SD**: Hand sealed (loaded) Compartment Seal at Discharge

6.1.1.8.5.3 Copy Report

☞ To printout a copy of the last report the numeric key **<6>** has to be pressed. Immediately a copy of the last report will be printed.

6.1.1.8.5.4 Other Reports

☞ To start the printout of other reports you have to press the key **<7>**.

The following message is displayed.

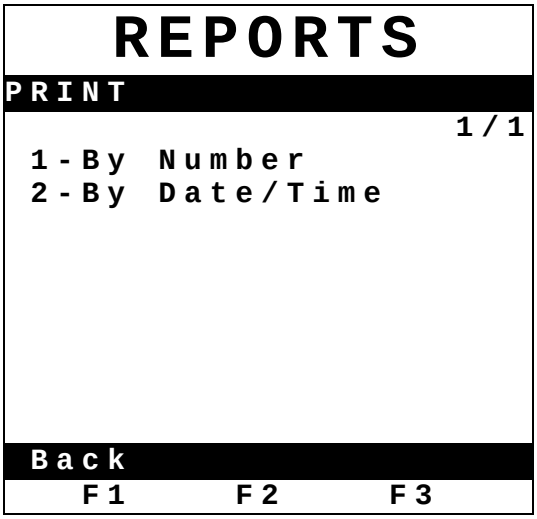

1 - Printout of reports by number.

2 - Printout of reports by date/time.

☞ The printout has to be done according to chapter 6.1.1.8.3 (Logbook printout).

6.1.1.8.6 Print data to Laptop

It is also possible to send the print data not to a printer but to a laptop. The connection to the laptop is done with socket cable, part no. SPD-DR-KA2.. How to configure and use the laptop is described in an extra documentation, DOK-433.

7 Checking the functionality

The test procedure is to be performed, to ensure proper operation of a newly installed NoMix 2000 System. The test procedure should be followed step by step and in its entirety.
Should any faults occur with the operation of the pneumatic system during testing, please refer to the indicated fault finding section.

7.1 Test device: depot / petrol station simulation

7.1.1 Short description

The test device, part no. "NM2TEST" (see drawing no. E51.351529) is a depot / petrol station simulation and is required for checking the NoMix 2000 system. It simulates both a depot loading arm equipped with TAGs including vapour recovery line, and a petrol station equipped with TAGs including a product connector and a vapour recovery connector. The depot connector is labelled with: Depot, Product / Vapour, the petrol station connector is labelled with: Forecourt, Product / Vapour.

7.1.2 Connections

see appendix drawing no. E51.351529

- Identification: Depot / Product
  Connection of the API coupling (test line with banana plug) for loading
- Identification: Depot / Vapour
  Connection of the Vapour Recovery Valve (test line with banana plug) for loading
- Identification: Forecourt / Product
  Connection of the API coupling (test line with banana plug) for discharge
- Identification: Depot / Vapour
  Connection of the Vapour Recovery Valve (test line with banana plug) for discharge

7.2 System Test

Step	Operation	System Response	Fault Finding Section
1	Pull MASTER switch Raise and lock guardbar	Each vent valve will open Guardbar interlock pins will retract Vehicle immobilisation will engage Master switch indicator will change colour	F1 / F2 F3 F5
2	Depress emergency knock off buttons	Master switch will retract Vent valves will close Guardbar pins will extend Vehicle immobilisation will disengage	F6 F4
3	Pull MASTER switch	See step 1	See step 1
4	Fit the vapour recovery adapter to the VRV	VRV will fully depress Coaming vent valve will close	F7
5	Remove vapour recovery adapter from VRV	Interlock will fully extend Coaming vent valve will open	F2
6	Repeat Step 4	See step 4	See step 4
7	Open foot valve: Start filling compartment 1 according to the driver's short instructions and description of the test device part no. NM2Test (depot / petrol stations simulation)	Footvalve will open	F8
8	Close foot valve: Stop filling compartment 1 according to the driver's short instructions and description of the test device part no. NM2Test (depot / petrol stations simulation)	Footvalve will close	F9
9	Repeat step 7 and 8 for each compartment	See step 7 and 8	See step 7 and 8
10	Open the foot valve and the API coupling: Start discharge from compartment 1 according to the driver's short instructions and description of the test device part no. NM2Test (depot / petrol stations simulation)	Foot valve and API will open	F8 F10
11	Close the foot valve and the API coupling: Stop discharge from compartment 1 according to the driver's short instructions and description of the test device part no. NM2Test (depot / petrol stations simulation)	Foot valve and API will close	F9 F11
12	Repeat Step 10 and 11 for each compartment	See step 10 and 11	See step 10 and 11

7.2.1 Fault Finding (Pneumatic)

No.	Fault	Possible Reasons	Solutions
F1	A compartment vent valve is not opening	Master switch is not pulled	Pull the Master switch
		Physical obstruction to the valve	Provide ample clearance for the valve to open
		Air leak or blockage in pipe	Repair leaks or replace pipes / check pneumatic installation
		Compartment vent valve is dirty or damaged	Inspect and possibly replace the compartment vent valve
F2	The coaming vent valve is not opening	Master switch is not pulled	Pull the Master switch
		Physical obstruction to the valve	Provide ample clearance for the valve to open
		Air leak or blockage in pipe	Repair leaks or replace pipes / check pneumatic installation
		Coaming vent valve is dirty or damaged	Inspect and possibly replace the coaming vent valve
F3	Guardbar interlock pins do not retract and so the guardbar will not raise	Master switch is not pulled	Pull the Master switch
		Air leak or blockage in pipe	Repair leaks or replace pipes / check pneumatic installation
		Guardbar interlocks damaged	Inspect and possibly replace the guardbar interlock
		A Guardbar interlock pin is unable to retract The hole in the guardbar is not lined up with the guardbar interlock pins	Make sure that the guardbar interlock pin has enough clearance to easily retract out of the guardbar locking hole
F4	Guardbar interlock pins do not extend when the guardbar is in the „lowered“ position	Master switch is not pushed in	Push the Master switch in
		Air signal exists on the guardbar interlock (RED Port)	Check pneumatic installation
		Guardbar interlocks damaged	Inspect and possibly replace the guardbar interlock
		The hole in the guardbar is not lined up with the guardbar interlock pins	Readjust the guardbar / Remount the guardbar interlocks
F5	The vehicle immobilisation does not engage when the master switch is pulled	Master guardbar interlock pin has not retracted	See F3
		System is incorrect piped	Check pneumatic installation
		Damaged master guardbar interlock	Inspect and possibly replace the guardbar interlock

No.	Fault	Possible Reasons	Solutions
F6	Emergency buttons do not shut the system down	Emergency buttons are incorrectly installed	Check pneumatic installation for errors
F7	Coaming vent valve will not close	Coaming vent valve is dirty or damaged	Inspect and possibly replace the coaming vent valve
		Air pipe is kinked or damaged	Repair or re-install pipe
F8	Footvalve will not open	Master switch is not pulled	Pull the Master switch
		Air leak in pipe of relevant compartment	Repair leaks or replace relevant pipes / check pneumatic installation
		Footvalve is dirty or damaged	Inspect and possibly replace the footvalve
F9	Footvalve will not close	Footvalve is dirty or damaged (jammed)	Inspect and possibly replace the footvalve
		Air pipe is kinked or blocked	Repair or re-install pipe
F10	A compartment API coupling will not open	Master switch is not pulled	Pull the Master switch
		Air leak in pipe of relevant compartment	Repair leaks or replace relevant pipes / check pneumatic installation
F11	API coupling will not close	API coupling is dirty or damaged (jammed)	Inspect and possibly replace the API coupling
		Exhaust pipe is blocked	Inspect, clean and possibly replace the pipe
		Air pipe is kinked or blocked	Repair or re-install pipe
F12	Master switch does not stay out when pulled	System air pressure is too low	Check air pressure at the air source and increase to above 3 bar
		Air leak in pipe	Repair leaks or replace relevant pipes / check pneumatic installation
		Filter / Lubricator is clogged	Clean the filter
F13	Valves leak product and/or vapour	Bolts are loose	Tighten bolts
		Gasket have been overly compressed and damaged	Replace the damaged gasket

7.2.2 Fault Finding (Electronic)

Fault finding and corrective action must be carried out by a service workshop. The warnings on the housings, and generally EN 60079-14 and VDE 0165 must be followed (see also national standards / requirements). An appropriate measuring instrument must be used. If necessary, this should be Ex-protected (e.g. digital multi-meter from EX-ELEC, type DIGEX-A). Prior to disconnecting or connecting of plug connectors or cables, the electronic system must be switched off.

7.2.2.1 NoMix 2000 fault

Fault (message)	Possible cause	Corrective action
No display - the LEDs for indicating the supply voltage in the main unit and in the interface modules are not lit.	• No supply voltage 24 V in the main unit and in the interface modules (drawing E51.351351 / E51.351673 between terminal 1 & 2). • Power supply unit of the display interface is faulty • Serious CAN bus fault.	• Ensure supply voltage is present, check supply line from the on-board supply system to the main unit and to the interface modules. • If only the LED for displaying the supply voltage in the display interface is not lit → replace the display interface. • Procedure according to Chapter 6.1.1.7.6, CAN bus test.
Display: Generic Terminal FMC F.A.SENING DC elektronik ab F1=Setup Display	• No communication connection between the main unit and the operating unit(s), or the operating unit is faulty. Drawing no. E51.351351 E51.351352	• Check the cabling of the internal CAN bus (green and yellow wire) between the main unit and all interface modules. • If the wiring is OK → replace the display interface. • If the fault has not been rectified → replace the main unit.
Display: FAULT No connection to interface wetleg sensor 1.	• The wetleg sensor interface receives no supply voltage, or there is no communication connection between the main unit and the wetleg sensor interface, or the wetleg sensor interface is faulty. Drawing no. E51.351346	• Check the cabling of the supply voltage (white and brown wire) and of the internal CAN bus (green and yellow wire) between the main unit and all interface modules. • If the wiring is OK → replace the wetleg sensor interface.

Fault (message)	Possible cause	Corrective action
Display: FAULT No connection to interface TAG scanner 1.	• The TAG scan interface receives no supply voltage, or there is no communication connection between the main unit and the TAG scan interface, or the TAG scan interface is faulty. Drawing no. E51.351478	• Check the cabling of the supply voltage (white and brown wire) and of the internal CAN bus (green and yellow wire) between the main unit and all interface modules. • If the wiring is OK → replace the TAG scan interface.
Display: FAULT No connection to interface I/O 1 (2).	• The I/O interface receives no supply voltage, or there is no communication connection between the main unit and the I/O interface, or the I/O interface is faulty. Drawing no. E51.351468	• Check the cabling of the supply voltage (white and brown wire) and of the internal CAN bus (green and yellow wire) between the main unit and all interface modules. • If the wiring is OK → replace the I/O interface.
Display: FAULT No connection to interface sensor 1	• The SPD sensor interface receives no supply voltage, or there is no communication connection between the main unit and the SPD sensor interface, or the SPD sensor interface is faulty. Drawing no. E51.351347	• Check the cabling of the supply voltage (white and brown wire) and of the internal CAN bus (green and yellow wire) between the main unit and all interface modules. • If the wiring is OK → replace the SPD sensor interface. .
A wetleg sensor reports "not empty"	• When “supervise filling of pipes” is activated the wetleg sensor only change to status empty when the footvalve is opened • Residue in the compartment. • Glass prism of the wetleg sensor is heavily soiled. • Wetleg sensor is faulty.	• Open footvalve • Empty compartment • Unscrew wetleg sensor and clean with a soft, clean and lint-free cloth. • Connect the wetleg sensor to the wetleg sensor cable of a compartment for which "empty" had been displayed. If the level sensor still shows <u>not</u> empty, the wetleg sensor has to be replaced.

Fault (message)	Possible cause	Corrective action
A wetleg sensor reports "not empty" (cont'd)	• Connection line or wetleg sensor interface NM2WET is faulty. Drawing E51.350346	• If the wetleg sensor was isolated according to the above test, reconnect the level sensor with the associated wire and connect it to a different input terminal in the level sensor interface that had previously reported "empty". If the wetleg sensor now does not show "empty", first of all the connection line should be replaced. If the fault is still not rectified, the wetleg sensor interface has to be replaced.
Display in the wetleg sensor test menu "S" or "D"	• Short circuit or interruption in the wetleg sensor wire • Wetleg sensor is faulty • Wetleg sensor interface faulty	• Disconnect the wetleg sensor wire in the wetleg sensor interface and disconnect the plug connector to the wetleg sensor. Check the cable with an ohmmeter for short circuit and interruption, replace the cable if necessary. • If the wetleg sensor wire is not faulty, check the wetleg sensor with an ohmmeter for short circuit and interruption; replace the wetleg sensor if necessary. • If the wetleg sensor wire and the wetleg sensor are not faulty, a wetleg sensor from another compartment should be connected for testing purposes. If short circuit or interruption continues to be displayed, the wetleg sensor interface has to be replaced. .
One or several keys of an operating unit are not working.	• The keypad of the operating unit is faulty	• Carry out a keypad test (see Chap. 6.1.1.7.4 and 6.1.1.1.10). If keys are still not functioning, the operating unit has to be replaced.
Printer not printing	• Printer is not connected correctly • Printer faulty	• Check the printer and the printer cable according to Chapter 3.1.7. • If the printer connection (printer cable) does not show a fault, replace the printer.
Modified SETUP is not stored, the pre-set values are re-displayed	• Fault in the EEPROM memory (electrically erasable, programmable memory) in the main unit, saving of the SETUP	• Replace main unit

7.2.2.2 Operator error / information for users

Fault (message)	Possible cause	Corrective action
Error: Wrong prod. (Discharge)	• The selected tank truck product does not correspond with the product of the buried tank	• Inspect the loading plan and select a compartment containing the same product as the buried tank.
Not connected	• Short circuit of the "scan line" at the tank truck • Short circuit of the "scan line" at the petrol station • Resistance of the delivery hoses is too high (Target: $\leq 10\ \Omega$)	• Rectify the short circuit between the insulated API coupling and the tank truck chassis. • The insulation of the flanges is faulty. Check the insulation of the product and vapour recovery connectors. • Check the hose resistance and renew the connections if necessary
Error. No vapour	• No vapour recovery line connected	• Check the connection
Wrong prod. (Loading)	• A product loading arm with a different quality was been connected with a non-empty tank truck compartment	• Disconnect the product loading arm and connect a different product loading arm (same product quality as residue product quality) or discharge residue

8 Maintenance

The electronic NoMix 2000 components are maintenance-free. The devices must not be modified mechanically or electronically in any way.

🛠 During cleaning with a steam cleaner or with pressurised water, the devices should be protected from the water jet.
Never aim the steam jet directly onto the devices!

§ We cannot accept responsibility for any damage caused by moisture in the equipment as a result of improper cleaning procedures.

NOTE: All devices must be visually inspected regularly according to ElexV§12 (see also national standards / requirements).

9 Part numbers of the NoMix 2000 modules

Module	Part number	Description
Electronic modules		
Main Unit	NM2MAIN	Main unit / central processing unit, electronics for NoMix 2000 main unit is completed at F.A.S. (burn EPROM, print and stick on type plate).
Display Interface	NM2DISPLAY	Display and operating unit
Main Unit / Display	NM2MAINDISP	Main Unit & Display
Wetleg sensor interface	NM2WET	Wetleg sensor interface
SPD sensor interface	MSSPD or MSSPD-N	SPD sensor interface SPD Namur sensor interface
TAG interface	NM2TAG	TAG scan interface
I/O interface	NM2IO	I/O interface, solenoid valve driver
Fuse junction box	MSKKFUSE	Junction box with integrated fuse
Ex-fuse 4A	7100090	Ex-fuse 4A installed in fuse junction box part no. MSKKFUSE
Junction box for extension	CS-KA-EXT	Junction box for sensor cable extension
EMIS Interface *)	CS-GW-EMIS	Interface to an **O**n-**B**oard-**C**omputer system
Printer	DR-295 or DR-298	Report printer
Electrical / mechanical components		
Sensor for remaining quantity	NS-2E	Wetleg Sensor
ESD discharge resistance	ASS-GW-ESA	ESD resistor for flange
ESD discharge resistance	ASS-GW-ESU	ESD resistor with cable
Solenoid valve	QMVBS	Filling release solenoid valve
Solenoid valve	QMV1D	Solenoid valve single
Solenoid valve	QMV2D	Solenoid valve dual
Solenoid valve	QMV6R	Solenoid valve 6-way
Pneumatic indicator	7100160	Rotowink pneumatic indicator
Air connection	5300190	Air connection for pneumatic indicator
Insulating bush	ASS-GW-IB80	Insulating bush for thread G3
Insulated cord	ASS-GS-SEIL-V	Insulated cord
Insulation for flange	ASS-GW-I80G	Insulation for flange NW80
Insulation for flange	ASS-GW-I100G	Insulation for flange NW100
Or-valve	PWV	Or-valve
Main pneumatically operated switch	NM2DSS	Main pneumatically operated switch, analogue make
Pneumatically operated switch	MSDSO	Foot valve pneumatically operated switch, analogue break
Pneumatically operated switch	MSDSO-6M	6-way foot valve pneumatically operated switch, analogue break, and main pneumatically operated switch, analogue make

Module	Part number	Description
2 x cable set	NM2KABEL	Cable set for wiring the power supply and the internal CAN bus
Cable set	ASS-GS-K25M	Connection cable between TAG interface and insulated couplings
SPD junction box *) (optional)	NM2KKSPD	If all 20 SPD sensor inputs are used, 2 sensors must be bundled into 1 line (6-compartment direct discharger / left / right).
Sealing Caps	NM2PG	Sealing Cap Set for PG7, PG9 and PG11
Printer connection socket *)	SPD-DR-KA2	Printer connection socket
Connection cable OBC to EMIS *)	MS-OBC-KA	connection cable OBC EMIS, 3-pole connection line between semitrailer junction box and 9-pole Sub-D-plug for connection with the OBC
Connection cable laptop to main unit or EMIS via SPD-DR-KA2 *)	MS-PC-KA	connection cable laptop to main unit or EMIS, 3-pole connection line between printer connection socket SPD-DR-KA2 and 9-pole Sub-D-plug for connection with the laptop
Semitrailer cable	AK	F.A.S semitrailer cable
API coupling	VKVP-I	pneumatically driven API coupling with inductive proximity sensor
API coupling	VKAP100-I2	pneumatically driven API coupling with inductive proximity sensor
Manuals		
	DOK-415E	Workshop & installation manual
	DOK-440E	Driver's Instructions
	DOK-441E	Driver's short instructions

*) optional components / modules

10 Software replacement

10.1 Main Unit

Prior to each software replacement, the tank truck setup must be recorded or printed, so that during re-commissioning with the new software all vehicle-specific parameters can be reproduced in the setup.

The EPROM (contains software) can be found in the main unit on the main CPU board (drawing no. 51.351339, no. E51.351371 and no. E51.351675).
It has a 32-PIN "PLCC" housing (rectangular housing with one bevelled corner) and a sticker showing the software version number (e.g. 1.00). One of the corners of the socket on the board is also bevelled. A special, commercially available "PLCC removal tool" is required for removing the EPROM from the socket, in order to avoid damaging the EPROM during removal. The two claws of the removal tool must be inserted into the two recesses of the EPROM socket. The two arms of the removal tool are then pushed together. This causes the EPROM to be lifted from the socket.
Prior to inserting the new EPROM, its connection contacts should be checked for damage ("bent connection legs"?).
The new EPROM is inserted into the socket and pressed in with your fingers without canting, until it noticeably engages.

🛠 **The bevelled corner of the EPROM must be aligned with the bevelled corner of the socket.**

After an EPROM on the main CPU board has been replaced, the complete SETUP menu has to be reset / checked.

10.2 Interface modules

The software for all interface modules is integrated into the microprocessor. The microprocessor has to be replaced if software needs replacing. As an example, drawing no. E51.351372 shows the SPD sensor interface. The procedure is identical to that described in Chapter 10.1.

🛠 **<u>Attention:</u> If it is necessary to replace the processor of the SPD sensor interface into which the software is integrated, the "dip switch no . 4 on the CPU board must be switched to "OFF" before removing the processor, in order to interrupt the supply from the internal battery (see also drawing no. E51.351372)!**

11 Extract from ElexV (§12) (see also national standards)

Tests

(1) The operator is responsible for having the electrical systems checked for proper condition in terms of the mounting, the installation and the operation by a qualified electrician or under the supervision of a qualified electrician.

1. Prior to first start-up

2. At certain intervals.

The operator has to specify the intervals in such a way that any faults that are to be expected will be detected in time. The tests according to clause 1, no. 2, have to be carried out every three years; they are not required, if the electrical systems are continuously monitored under the supervision of a responsible engineer.

(2) During the checks, the relevant and state of the art regulations must be followed.

(3) The authority responsible may request that a test log book containing certain entries be kept.

(4) In the event of damage or loss, or for other special reasons, the regulatory authority may request special tests to be carried out by a technical expert in individual cases. The operator is responsible for ensuring that a check according to clause 1 is arranged.

Extract from Federal Labour Gazette (Bundesarbeitsblatt) 3/1997 Page 101

12 Warranty and Service

The following conditions apply in respect of a warranty to the end user for this equipment - **in addition to the dealer's legal warranty in the purchase contract**:

1. The warranty period is 12 months and starts at the time of delivery of the device by Sening. For electronic products the registration forms must be fully completed and must arrive at Sening signed off by the installation organisation.
2. The warranty includes the correction of all damage to or faults in the equipment arising during the warranty period that demonstrably relate to material or manufacturing defects.

Not covered under the warranty:

- small deviations from the desired quality that are not significant for the value or the suitability for use of the equipment
- Damage or defects arising from connection other than to specification, improper handling and non-observance of the installation specification and instructions for use
- Damage from chemical and electrochemical effects of water or other liquids, electrical or electromagnetic influences, as well as generally from abnormal ambient conditions.
- Damage arising from external effects such as transport damage, damage by shock or impact, damage by weather effects or other natural phenomena.

3. The warranty claim is void if repairs or interventions are undertaken by persons that are not authorised by us or if our equipment is provided with amendments or accessories that are not suitable for our equipment and are not passed by us for the equipment.
4. Warranty work is performed in the manner that faulty parts are repaired by us free of charge or replaced with correct parts at our choice. Replaced parts become our property.
5. Warranty work is carried out free of charge in the first six months of the warranty period. Thereafter travelling time, travel costs and labour of the service personnel as well as any transport costs arising are charged or not reimbursed.
6. Warranty work neither causes an extension of the warranty period nor sets a new warranty period in progress. The warranty period for fitted replacement parts ends with the warranty period for the entire equipment.
7. On-going or other claims, especially those for replacement of damages or consequential damages arising outside the equipment, insofar as an obligation is not mandatory in law, are explicitly excluded.

13 Address and Contact

Important Note

All explanations and technical details given in this documentation have been produced and edited by the author with the greatest care. However the possibility of errors cannot be completely eliminated. We would be very grateful for the notification of any errors found.

Our service department would be pleased to advise and help you.
They can be reached under:

Measurement Solutions
F. A. Sening GmbH
Regentstrasse 1
D-25474 Ellerbek

Tel.:	+49 (0) 4101 304 - 0	(Switchboard)
Fax:	+49 (0) 4101 304 - 152	(Service)
Fax:	+49 (0) 4101 304 - 133	(Sales)
Fax:	+49 (0) 4101 304 - 255	(Customer Service)
E-Mail:	info.ellerbek@intl.fmcti.com	
Web:	www.fmctechnologies.com/measurementsolutions	

14 Setup: 6-compartment direct discharger truck

In the following the preset setup for an direct discharge truck "1-Int. Direct" is listed (see also preset setup chapter 6.1.1.1.1).

☞ A preceding **(+)** at the parameter means that this parameter has to be adjusted.

A preceding **(-)** at the parameter means that this parameter has not to be adjusted.

☍ When for instance in SPD sensor setup the first sensor of API is activated (set to an input channel) then the following parameter concerning the type and delay time is also visible and has to be adjusted.

Setup: 6-compartment direct discharger truck

Descibtion: International direct discharger truck

(+) SYSTEM
- (+) Serial number: 1
- (+) Operation Language: ENGLISH
- (+) Date order: day-month-year
- (+) Manual Sealing enabled: NO
- (+) Power off breaks seal: NO
- (+) Printer: Exclusive access
- (-) Printer connected at node: 21
- (+) Printer Baudrate: 9600
- (+) Nr. of lines: 55
- .(+) Nr. of columns: 35
- (+) Identification: NO
- (+) Password: *****

(+) COMPONENTS
- (+) Nr. of Terminals: 1
- (+) Nr. of Wetleg-IF: 1
- (+) Nr. of Overfill-IF: 0
- (+) Nr. of Output-IF: 1
- (+) Nr. of TAG Scan-IF: 1
- (+) Nr. of Hall-IF: 0
- (+) Nr. of SPD-IF: 1

(+) NETWORK
- (+) EMIS communication enabled: NO
- (-) EMIS node number: 21
- (+) Record events: NO
- (-) Events stored by: 21
- (-) Own node number: 11
- (-) CAN communication forced: NO

(+) TRUCK
- (+) Truck type: DIRECT
- (+) Number of compartments: 6
- (-) Number of OP: 0
- (-) Number of meters: 2
- (+) Number of 2" vapour nozzles: 0
- (+) Common vapour installed: YES
- (+) Bottomvalves press. balanced: NO
- (+) Air pressure switch installed: YES
- (+) Supervise filling of pipes: YES
- (-) GPSÜ-Option installed: NO

(+) PRODUCT
- (+) Used products 0011011000000000
- (+) Leaded products 0000000000000000
- (+) Product No. 3 Name: DK
- (+) Product No. 3 Danger Class: AIII
- (+) Product No. 3 Ref-Code: 2
- (+) Product No. 3 TAG-Code: 68
- (-) Product No. 3 OP-Code: 12
- (-) Product No. 3 HALL-Code: 12
- (+) Product No. 4 Name: BI
- (+) Product No. 4 Danger Class: AI
- (+) Product No. 4 Ref-Code: 3
- (+) Product No. 4 TAG-Code: 92
- (-) Product No. 4 OP-Code: 9
- (-) Product No. 4 HALL-Code: 10
- (+) Product No. 6 Name: SU
- (+) Product No. 6 Danger Class: AI
- (+) Product No. 6 Ref-Code: 5
- (+) Product No. 6 TAG-Code: 95
- (-) Product No. 6 OP-Code: 3
- (-) Product No. 6 HALL-Code: 9
- (+) Product No. 7 Name: SUP
- (+) Product No. 7 Danger Class: AI
- (+) Product No. 7 Ref-Code: 6
- (+) Product No. 7 TAG-Code: 98
- (-) Product Nr. 7 OP-Code: 6
- (-) Product Nr. 7 HALL-Code: 5

(+) LOADING
- (+) Loading mode: Compart.
- (+) Number of loadings: 6
- (+) Manual loading plan allowed: YES
- (+) Manual loading plan timeout (min): 60
- (-) Product code correction: NO
- (+) Permission valve ON: Loading mode
- (+) Permission valve OFF: Comp. Error
- (-) Open automatic: Not at. Man. LPlan
- (+) Close comp. after loading: YES
- (+) Compartment permission: Not empty
- (+) Comp. empty test: NO
- (-) Leave comp. open after test: NO
- (+) TAG disconnect delay (sec): 2
- (-) Magn.Code Delay (sec): 3
- (+) Wetleg to-wet- timeout (sec): 7
- (+) Vap.rec. at loading 0000000000000000

(+) DISCHARGE
- (+) Discharge mode: NoMix
- (+) Discharge on load.- side: YES
- (+) Number of discharges: 6
- (+) Number of A3-discharges: 6
- (+) Number of A2-discharges: 6
- (+) Number of A1-discharges: 6
- (+) Override Mode: HSV and COP
- (+) Override disabled if HSV active: NO
- (-) Overr. Meter with Vapour rec.: NO
- (+) Number of overrides: 5
- (+) Override timeout (min): 60
- (+) Override log-info: Standard
- (+) Short override menu: YES
- (+) Use DMS: NO
- (+) Wetleg to-dry- timeout (sec): 30
- (-) Products over met1 0011011000000000
- (-) Products over met2 0011011000000000
- (+) Vap.rec. at disch. 0001011000000000

(+) SENSORS
- (+) Ext. Load.Signal: 0
- (-) Type Load.Signal: Digital/Make
- (+) Ext. Disch.Signal: 0
- (-) Type Disch.Signal: Digital/Make
- (+) 1.Sensor man lid: 0
- (-) Type man lid: Digital/Make
- (+) 1.Sensor API: 0
- (-) Type API: Digital/Make
- (-) API Delaytime (sec): 2
- (+) 1.Sensor BV: 0
- (-) Type BV: Digital/Make
- (+) 1.Sensor LV: 0
- (-) Type LV: Digital/Make
- (+) Parking Brake: 0
- (-) Type Parking Brake: Digital/Make

(+) Events
- (+) Record TAG-Informationen: NO
- (+) Record COP-Informationen: NO
- (+) Record Vap.-Informationen: NO

15 Appendix

15.1 Elementary / Block diagrams

	Drawing no.
NoMix 2000 & SPD Functionality	E11.351489
Truck-Trailer Spiral Cable	E61.351449
Positioning of Junction Boxes (example)	E11.351493
Drilling Scheme (Positioning of Junction Boxes)	E11.351498

15.2 Tender drawings

Main Unit	E51.351339
Display Interface	E61.351301
Main Unit / Display NM2MAINDISP	E61.351549
Wetlegsensor Interface	E51.351334
TAG-Interface	E51.351335
I/O-Interface	E51.351466
SPD-Sensor Interface	E51.351333
SPD-Namur Sensor Interface	E51.351706
Junction Box with Fuse	E51.351418
Junction Box for Extension of Wires	E51.351499
Printer	E51.350757
NoMix 2000 Depot / Forecourt Simulation Unit	E51.351529

15.3 Electrical circuit diagrams

System Wiring Diagram	E11.351488
System wiring diagram NoMix 2000 with NM2MAINDISP	E81.351676
Wiring Diagram Main Unit	E51.351351
Wiring Diagram Display Interface	E51.351352
Wiring diagram Main Unit / Display	E51.351673
Wiring Diagram Wetlegsensor Interface	E51.351346
Wiring Diagram TAG-Interface	E51.351478
Wiring Diagram I/O-Interface	E51.351468
Wiring Diagram SPD-Sensor Interface	E51.351347
Wiring Diagram Junction Box with Fuse	E51.351419
Main Unit Setup Switch / Software Change	E51.351371
Main Unit / Display Setup-Switch / Software Change	E51.351675
Interface Software Change	E51.351372

15.4 Electromechanical components

Wetlegsensor	E51.351307
Wetlegsensor Adjustment	E51.350839
Flange / API Coupling Isolation	E61.351490
TAG Scan Wire Connection	E51.250226
ESD Resistor for Flange	E51.350228
ESD Resistor with Cable	E51.350229
Rail with Air Pressure Switches	E61.351480
Solenoid Valve BS	E51.24070
Solenoid Valve 1D	E51.24090
Solenoid Valve 2D	E51.24169
Solenoid Valve 6R	E51.24068
Pneumatic operated Footvalve	E51.250469
Pneumatic operated Footvalve	E51.250466
Pneumatic API Coupling with Position Monitoring	E51.250970
API Cover	51.22377
Vent Valve 80 with Sequence Control	E61.250644
Pneumatic two Way Valve	E51.22570
Interlock for VKAP100	E51.250608

15.5 Pneumatic circuit diagrams truck with direct discharge

Pneumatic circuit diagram	E61.251317

15.6 EC-Type Examination Certificate

Main Unit Type NM2-MAIN.-...	TÜV 00 ATEX 1599
Display Interface Type NM2-DISPLAY.-...	TÜV 00 ATEX 1601
Main Unit / Display Type NM2-Main/Disp.-...	TÜV 03 ATEX 2022
Wetlegsensor Interface Type NM2-WET.-...	TÜV 00 ATEX 1603
SPD-Sensor Interface Type NM2-SPD.-...	TÜV 00 ATEX 1602
TAG Interface Type NM2-TAG.-...	TÜV 01 ATEX 1706
I/O-Interface Type NM2-I/O.-...	TÜV 01 ATEX 1707
Electronic encoder, type TAG	TÜV 02 ATEX 1981
Wet-leg Sensor Type S-NS-2.-...	TÜV 02 ATEX 1982
Inductive proximity sensor	PTB 03 ATEX 2013

15.7 EC Declaration of Conformity

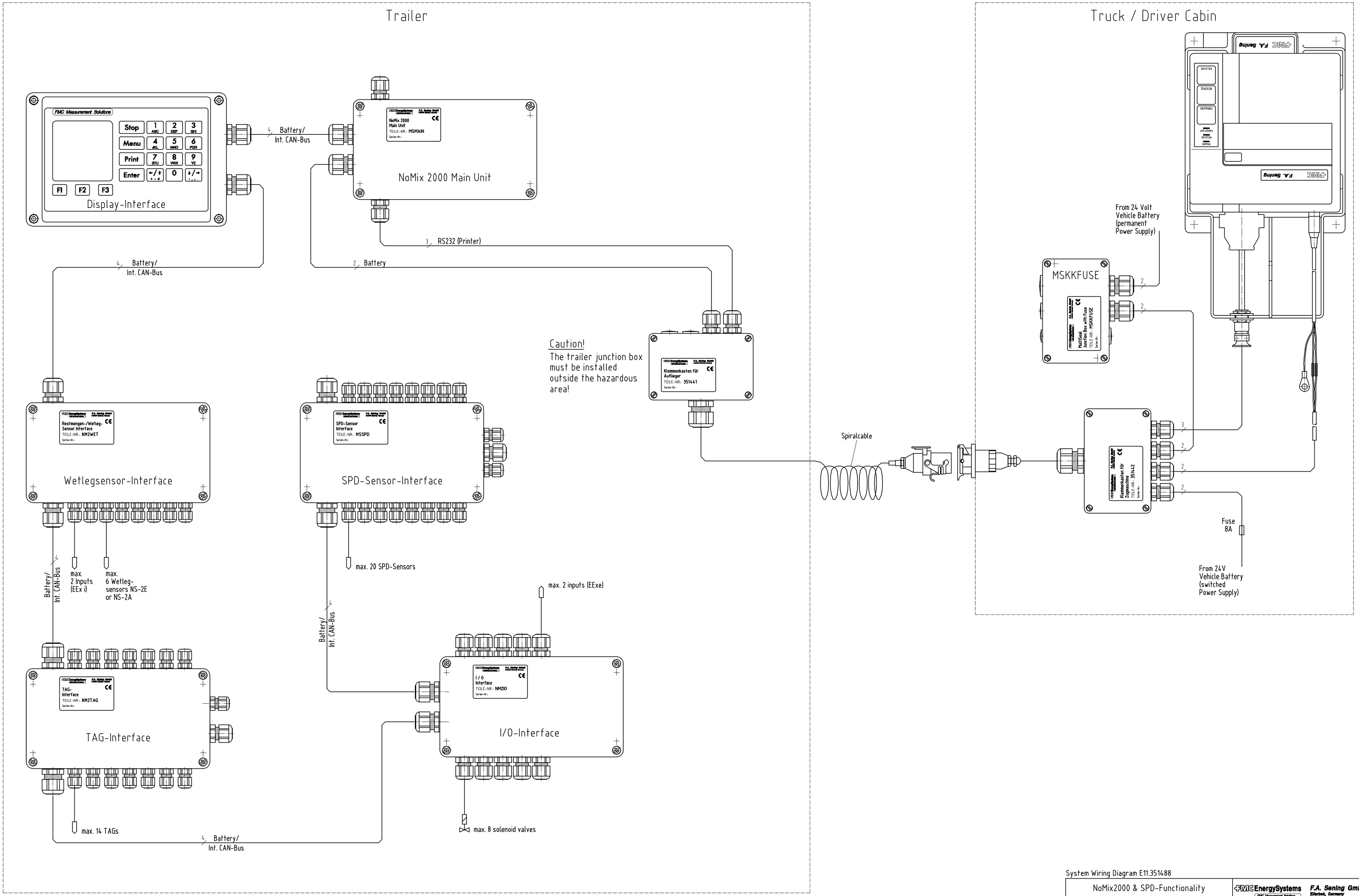

System Wiring Diagram E11.351488

NoMix2000 & SPD-Functionality	FMC EnergySystems — F.A. Sening GmbH, Ellerbek, Germany
Principle Wiring Diagram permanent Printer connection	Geänd. am : / Datum : 26.04.2001 / Name : Benthack / Zeichnungs-Nr. E11.351489 / Rev.

"Schutzvermerk nach DIN 34 beachten"

DOK-415E

Trailer

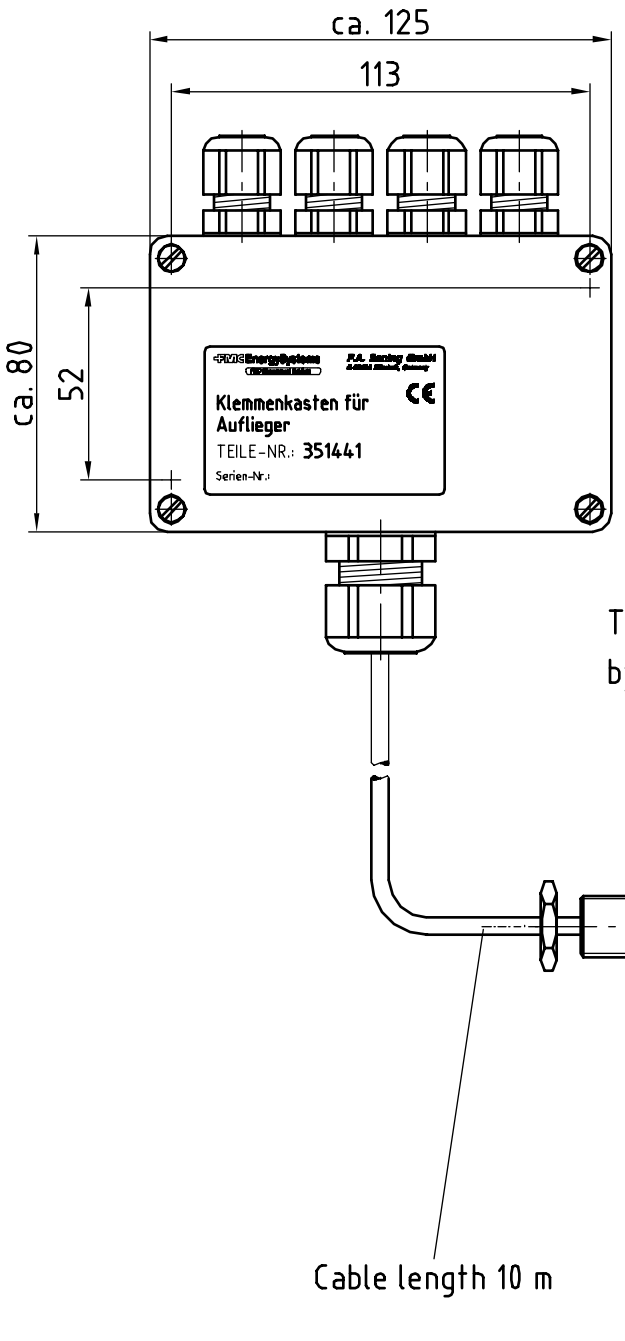

The wiring has to be done
by the customer!

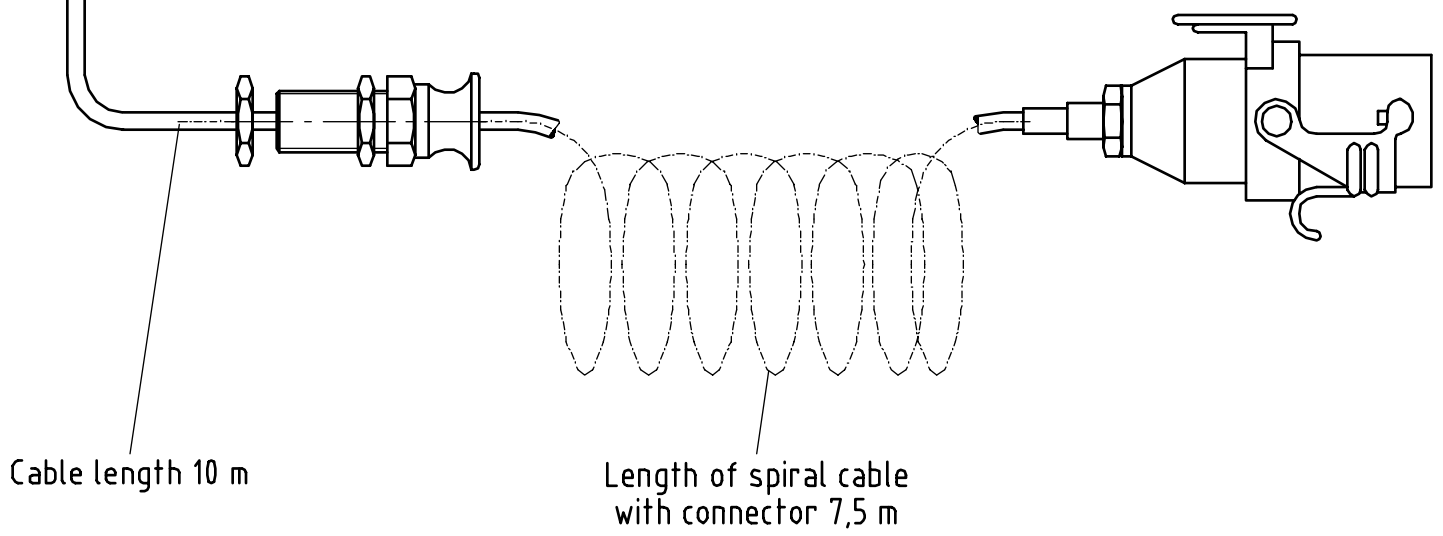

Truck / Cabine

The wiring has to be done
by the customer!

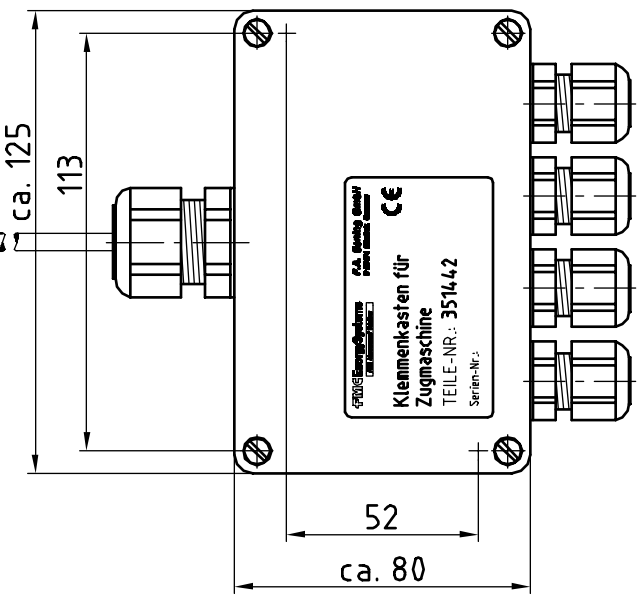

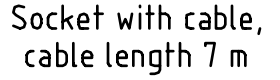

All dimensions in mm / m

"Schutzvermerk nach DIN 34 beachten"

Spiral cable, complete with Junction Boxes

FMC EnergySystems — FMC Measurement Solutions
F.A. Sening GmbH — Ellerbek, Germany

	Gewicht :	Datum :	Name :
3	kg	19.11.2001	Benthack

Bestell–Nr.	Geänd. am :	Zeichnungs–Nr.	Rev.
AK		E61.351449	

DOK-415E

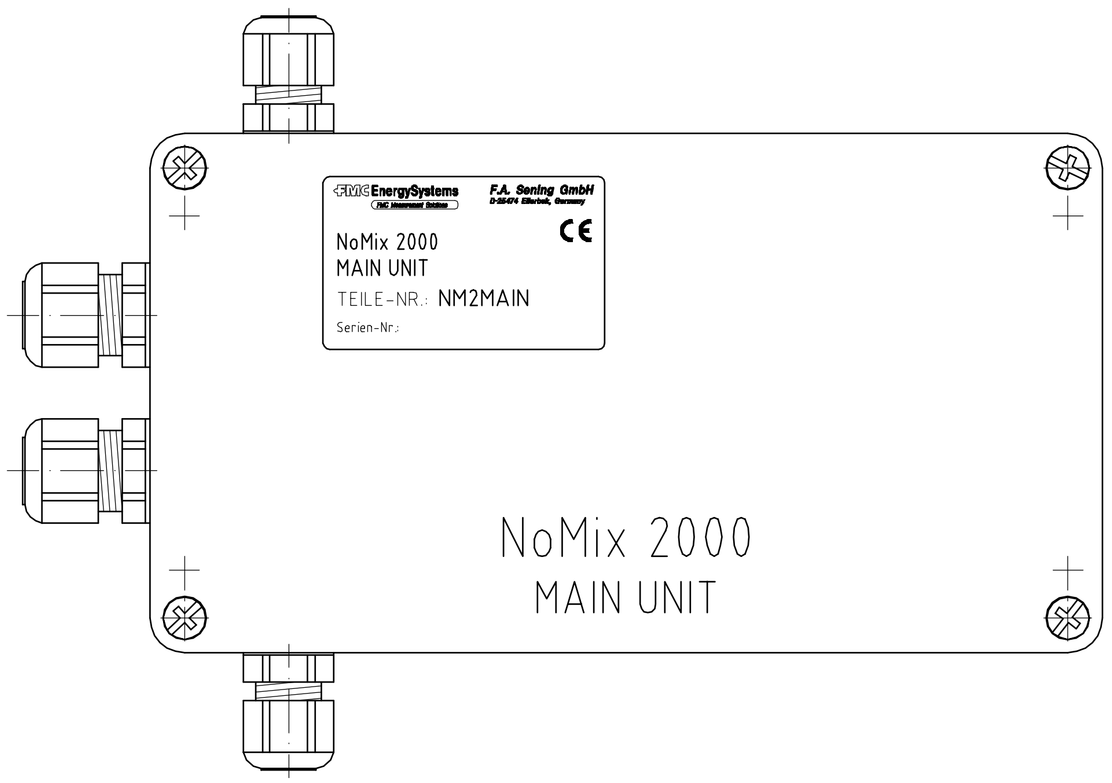

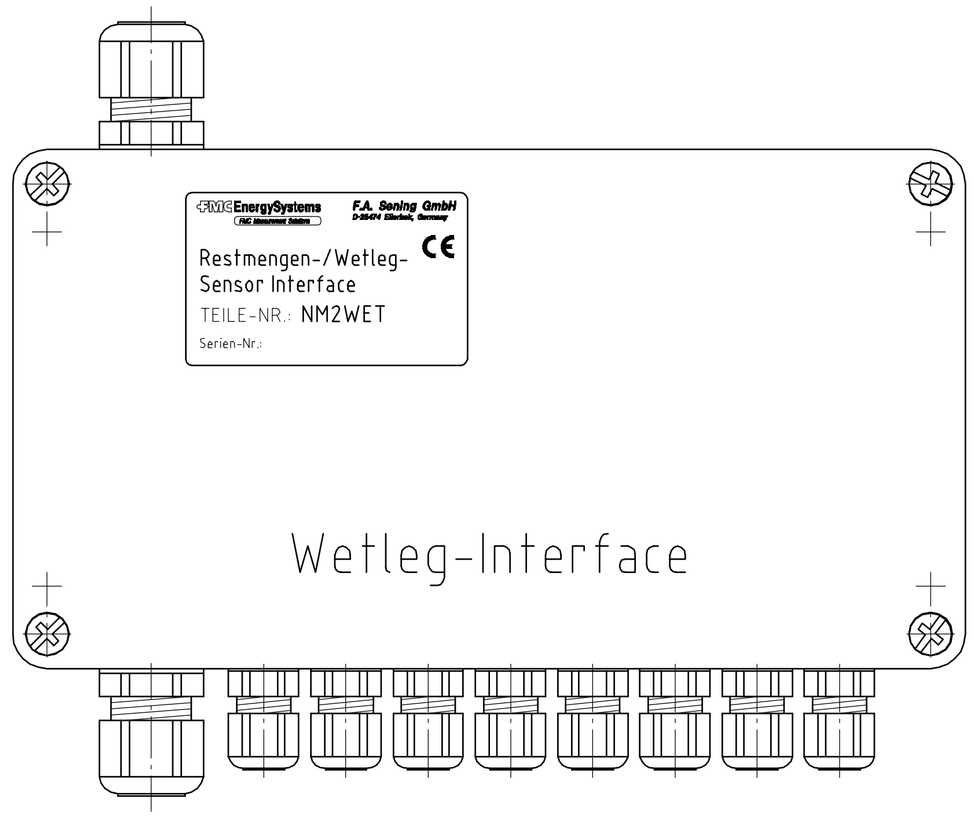

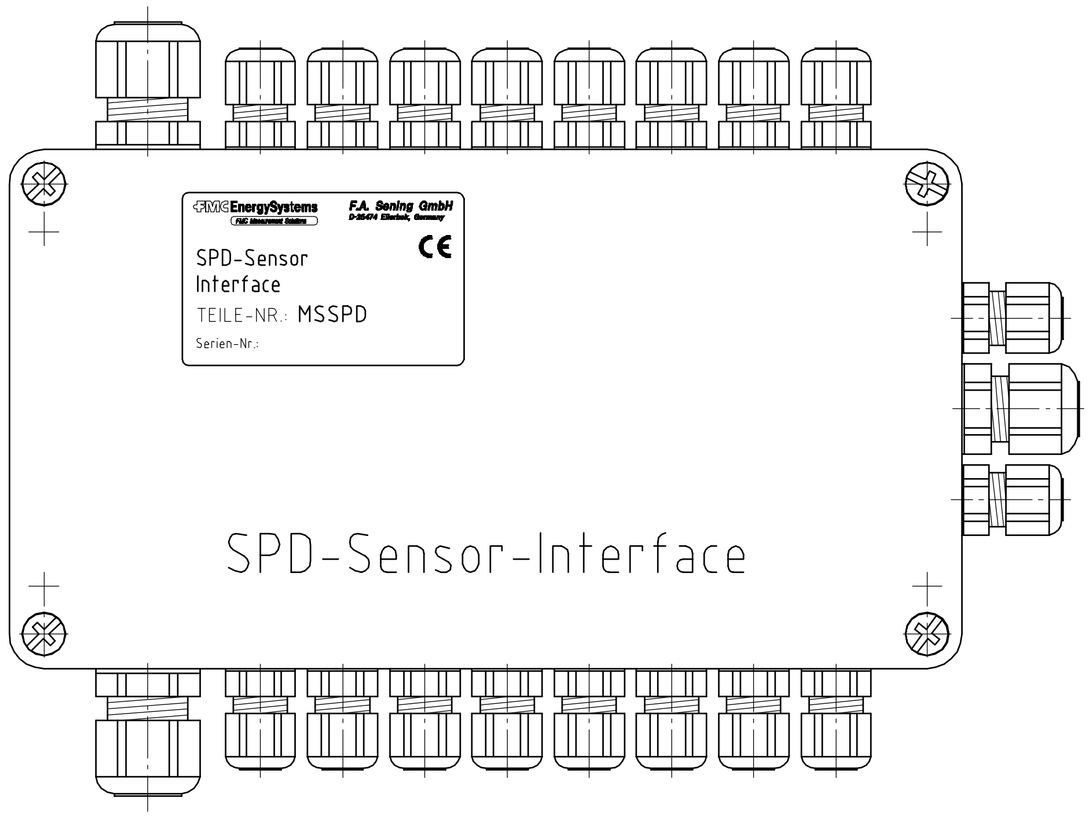

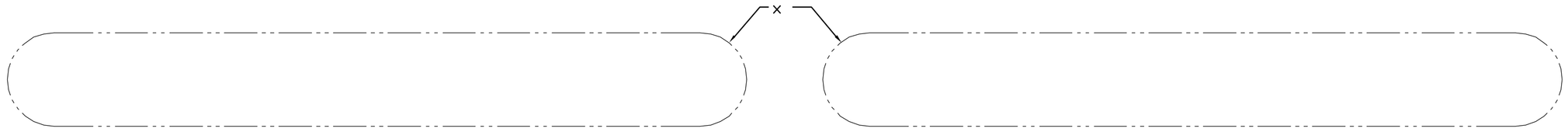

TOP

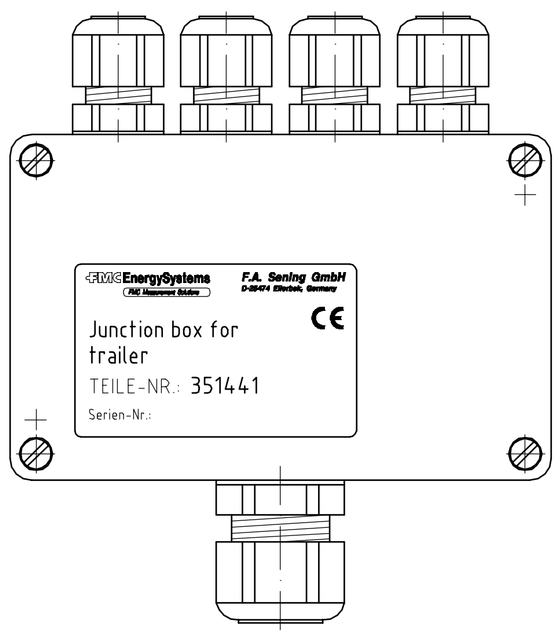

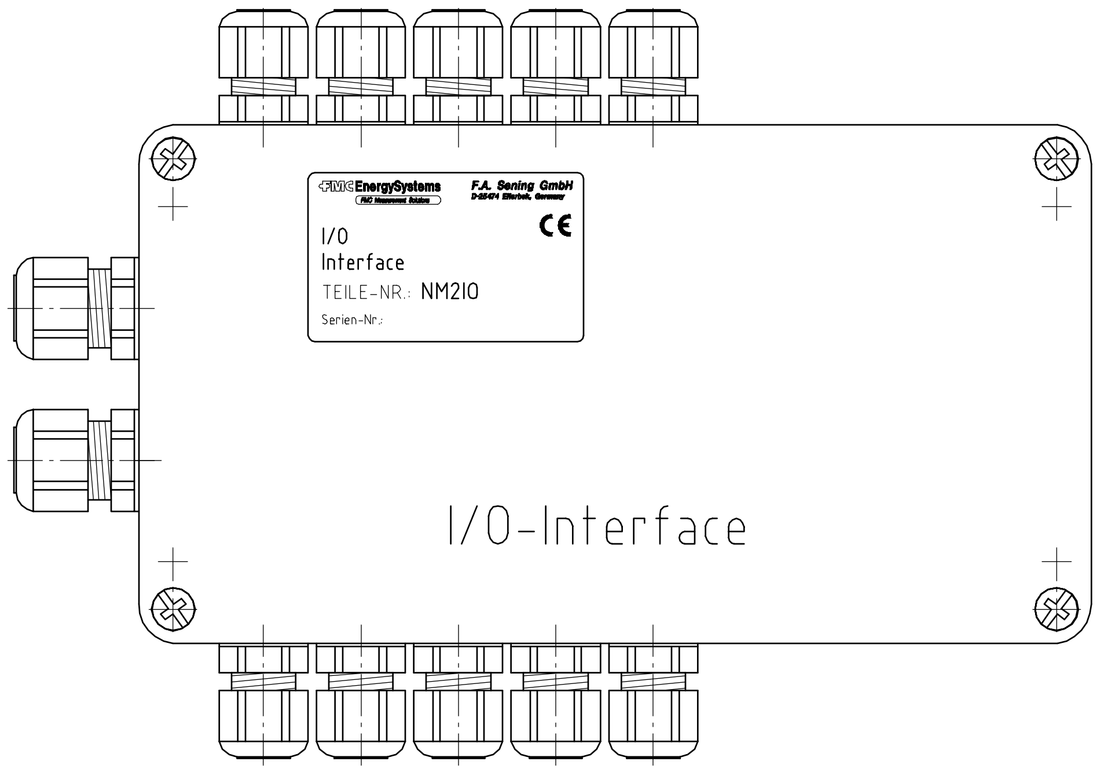

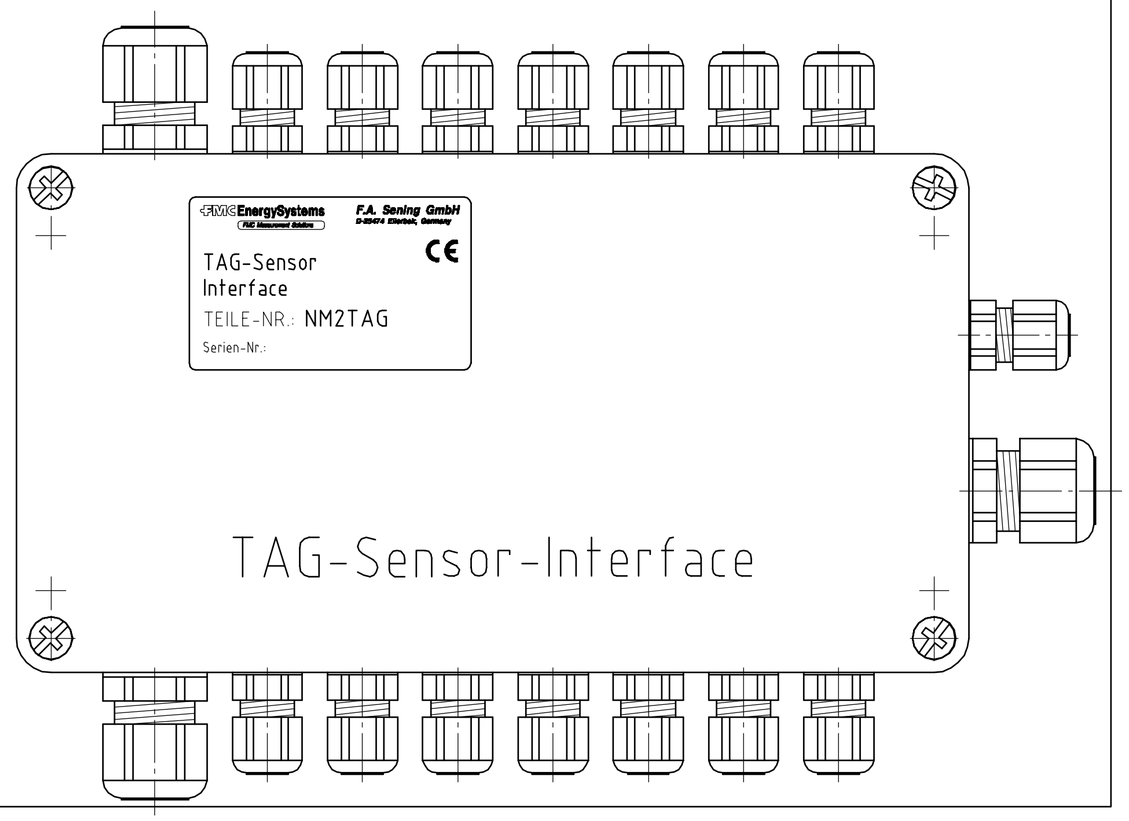

Important Note: Mounting plate is not part of delivery

× oval hole recommended for wiring

Material:
Aluminium
a thickness of 5mm is recommended

to be used with:
Fiber Control Box
500 x 838 x 550 (DWG No SK 310952 SH 2/4)
mounted on the back side of the cabinet

"Schutzvermerk nach DIN 34 beachten"

MultiSeal / NoMix2000

Positioning of
Junction Boxes, Overview

FMC EnergySystems
F.A. Sening GmbH
Ellerbek, Germany

Geänd. am :	Datum :	Name :
	22.05.2001	Benthack
	Zeichnungs-Nr.	Rev.
	E11.351493	

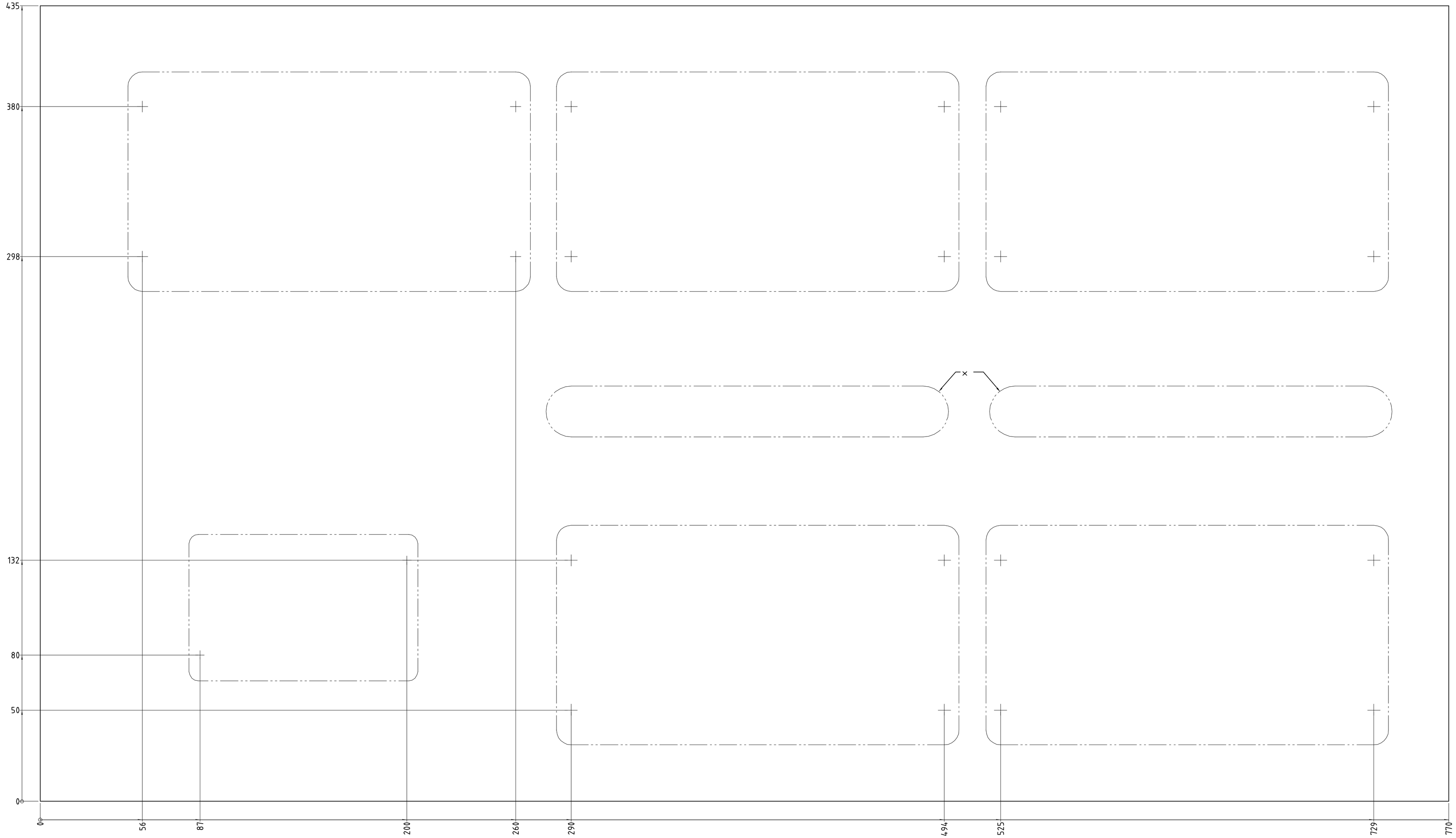

Important Note: Mounting plate is not part of delivery

× oval hole recommended for wiring

Material:
Aluminium
a thickness of 5mm is recommended

All dimensions in mm

The drilling diameter has to be executed according to be respective demands.

Oberflächenzeichen nach ISO 1302
Allgemeintoleranzen nach DIN ISO 2768-mK

"Schutzvermerk nach DIN 34 beachten"

Übernommen in:		Geänd. am:	FMC EnergySystems (FMC Measurement Solutions)	F.A. Sening GmbH Ellerbek, Germany	
			Werkstoff:	Werkst.-Nr.:	Maßstab:
				Datum / Name	Med.-Nr.:
			gez.	22.05.2001 Benthack	Teile-Nr.: Rev.:
			gepr.		
Paßmaß	Abmaß		Drilling Scheme MultiSeal / NoMix2000	Zeichnungs.-Nr. E11.351498	Rev.:

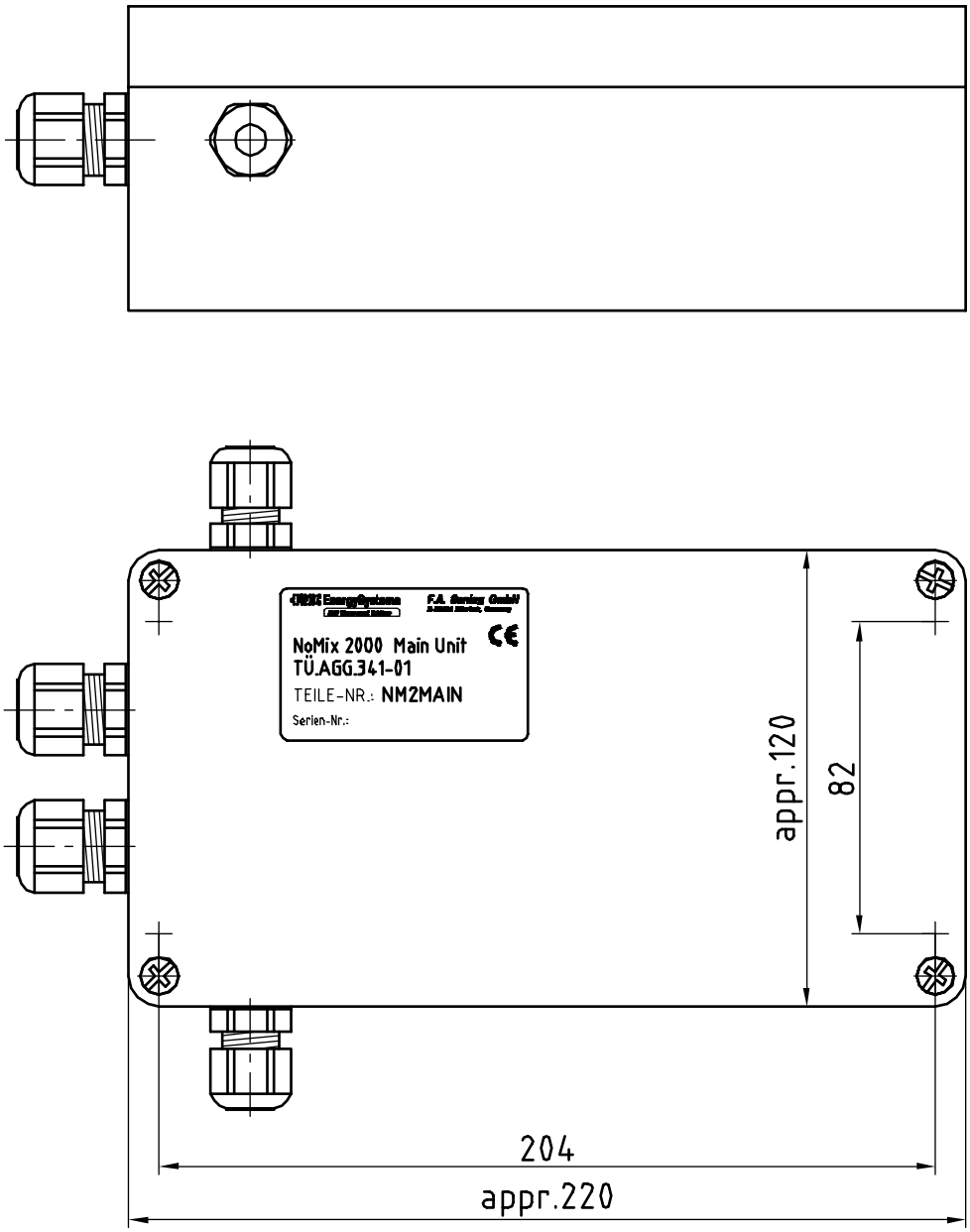

DOK-415E
"Schutzvermerk nach DIN 34 beachten"

Main Unit (NoMix2000), complete

FMC EnergySystems
FMC Measurement Solutions

F.A. Sening GmbH
D-25474 Ellerbek, Germany

4	Weight : kg	Date : 29.01.2003	Name : Benthack

Order No. NM2MAIN

Changes :	Drawing No. E51.351339	Rev.

DOK-415E; DOK-416E

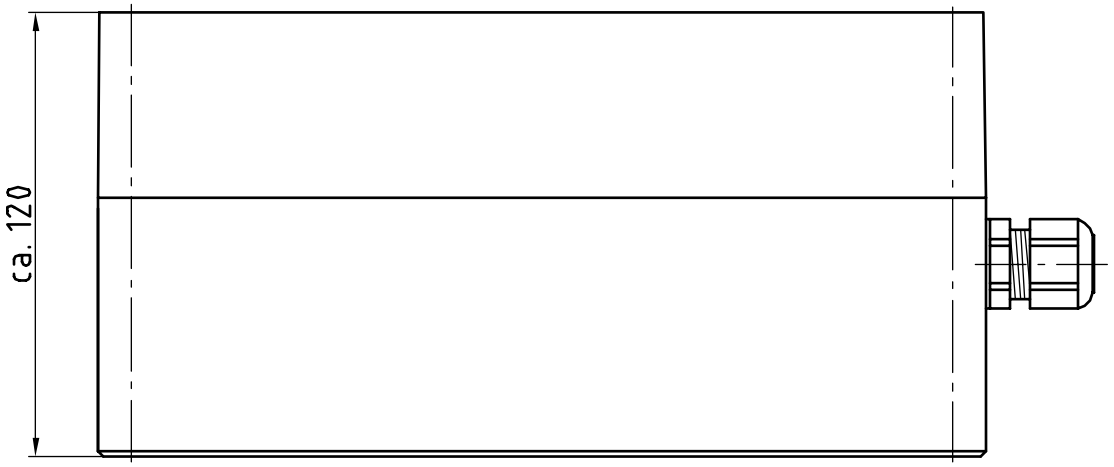

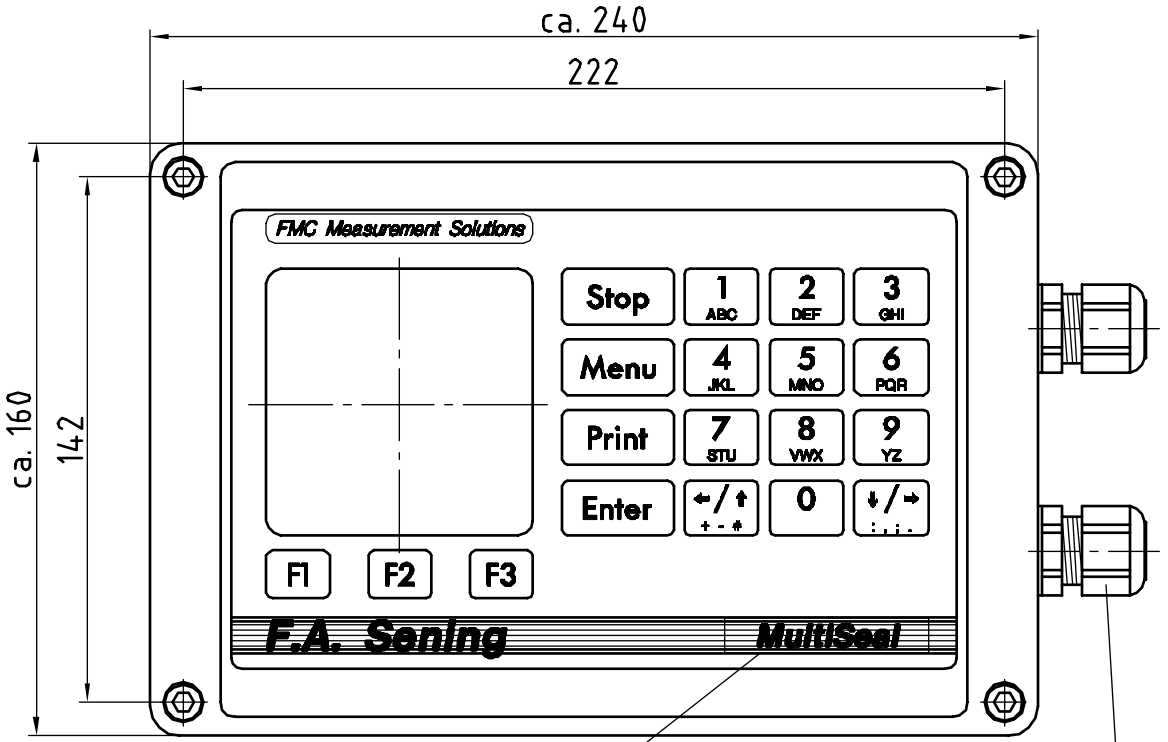

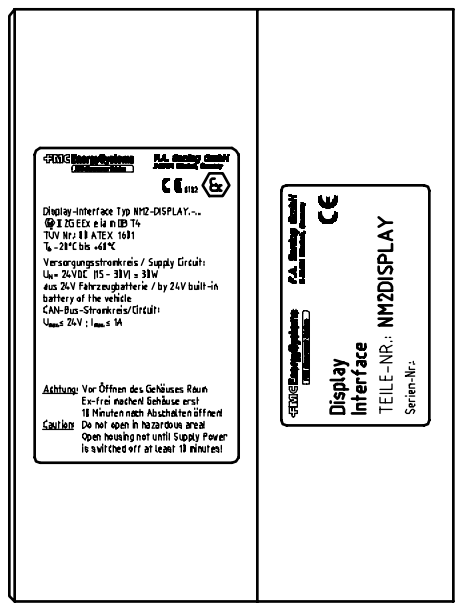

Pg11, EEx e (2x)
black

For use at NoMix 2000 the name has to be changed from MultiSeal to NoMix 2000. Therefore take out the stripe with the name, insert it in the mirrored position and fix it with tape.

All dimensions in mm

"Schutzvermerk nach DIN 34 beachten"

Display–Interface, complete			FMC EnergySystems FMC Measurement Solutions	F.A. Sening GmbH Ellerbek, Germany
	2	Gewicht : kg	Datum : 12.11.2001	Name : Benthack
Bestell–Nr. NM2DISPLAY		Geänd. am :	Zeichnungs–Nr. E61.351301	Rev.

DOK-415E

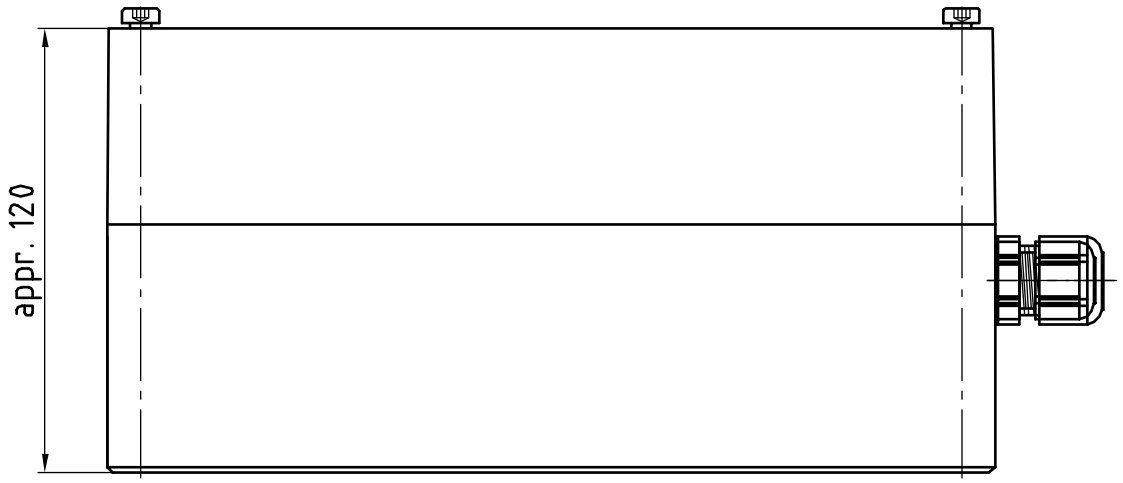

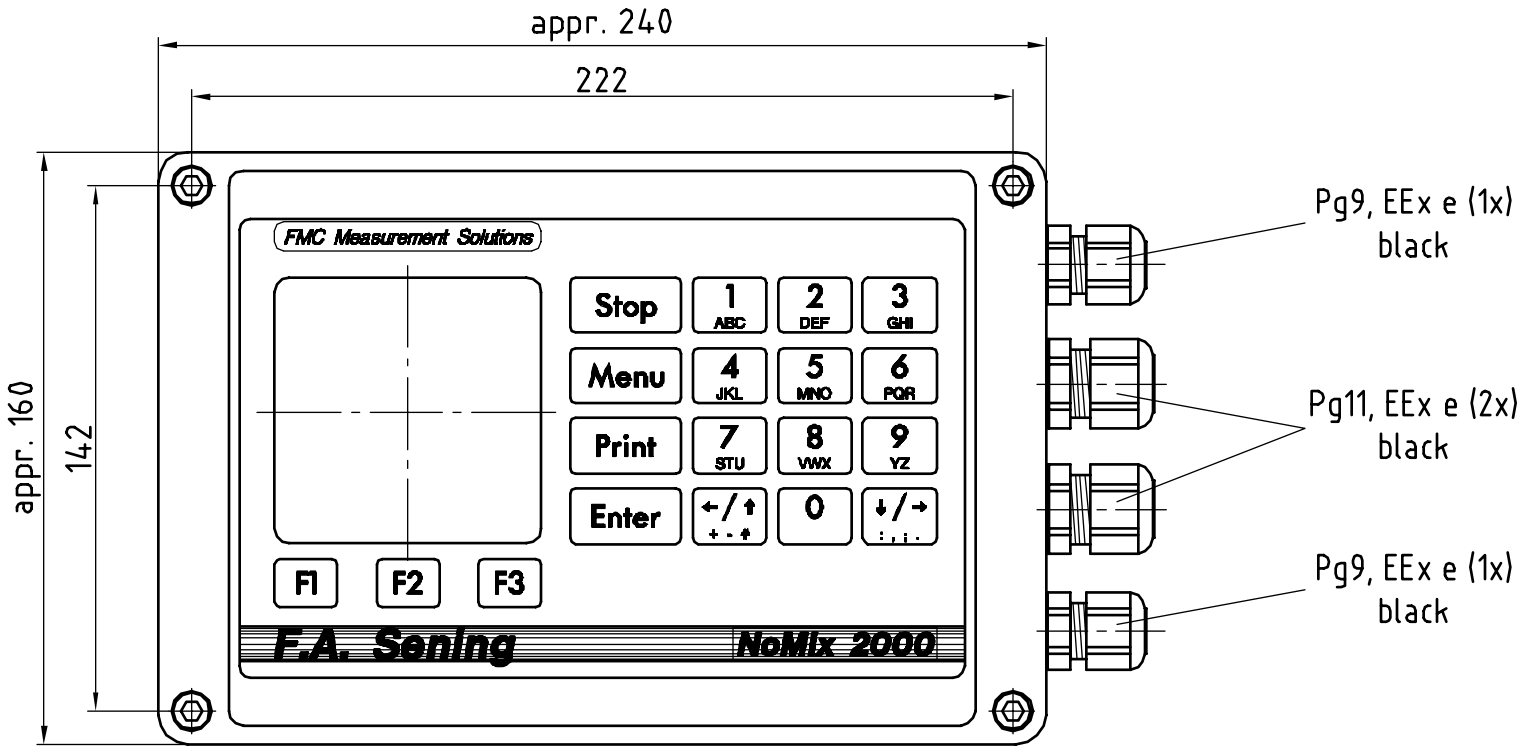

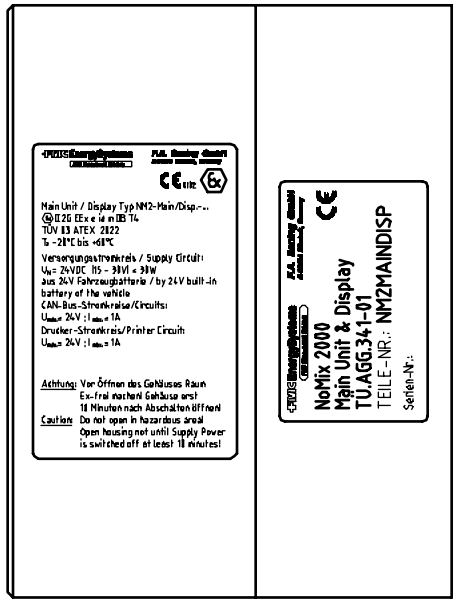

"Schutzvermerk nach DIN 34 beachten"

NoMix 2000 Main Unit & Display complete	FMC EnergySystems FMC Measurement Solutions	F.A. Sening GmbH D-25474 Ellerbek, Germany	
	2	Weight : kg	Date : 05.02.2003	Name : Benthack
Order No. NM2MAINDISP	Changes :	Drawing No. E61.351549	Rev.

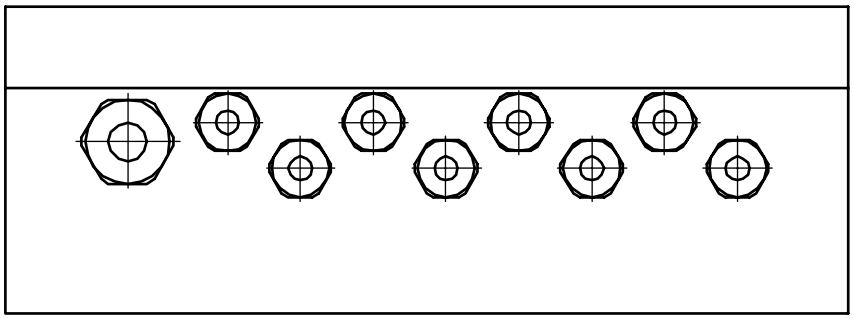

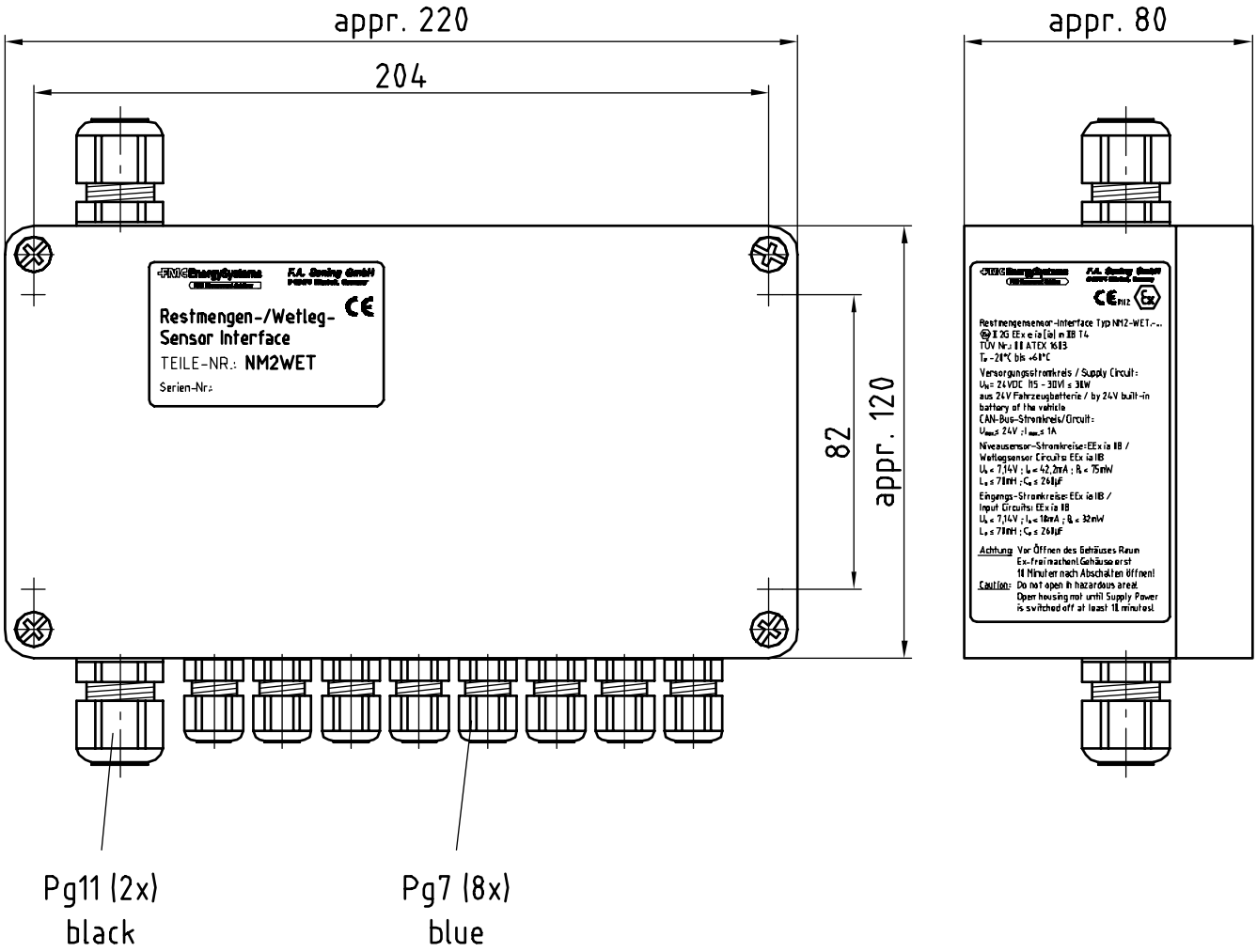

DOK-415E; DOK-416E
"Schutzvermerk nach DIN 34 beachten"

Restmengensensor-Interface, complete	FMC EnergySystems FMC Measurement Solutions	F.A. Sening GmbH D-25474 Ellerbek, Germany	
	3	Weight : kg	Date : 22.11.2002
			Name : Benthack
Order No. NM2WET	Changes :	Drawing No. E51.351334	Rev.

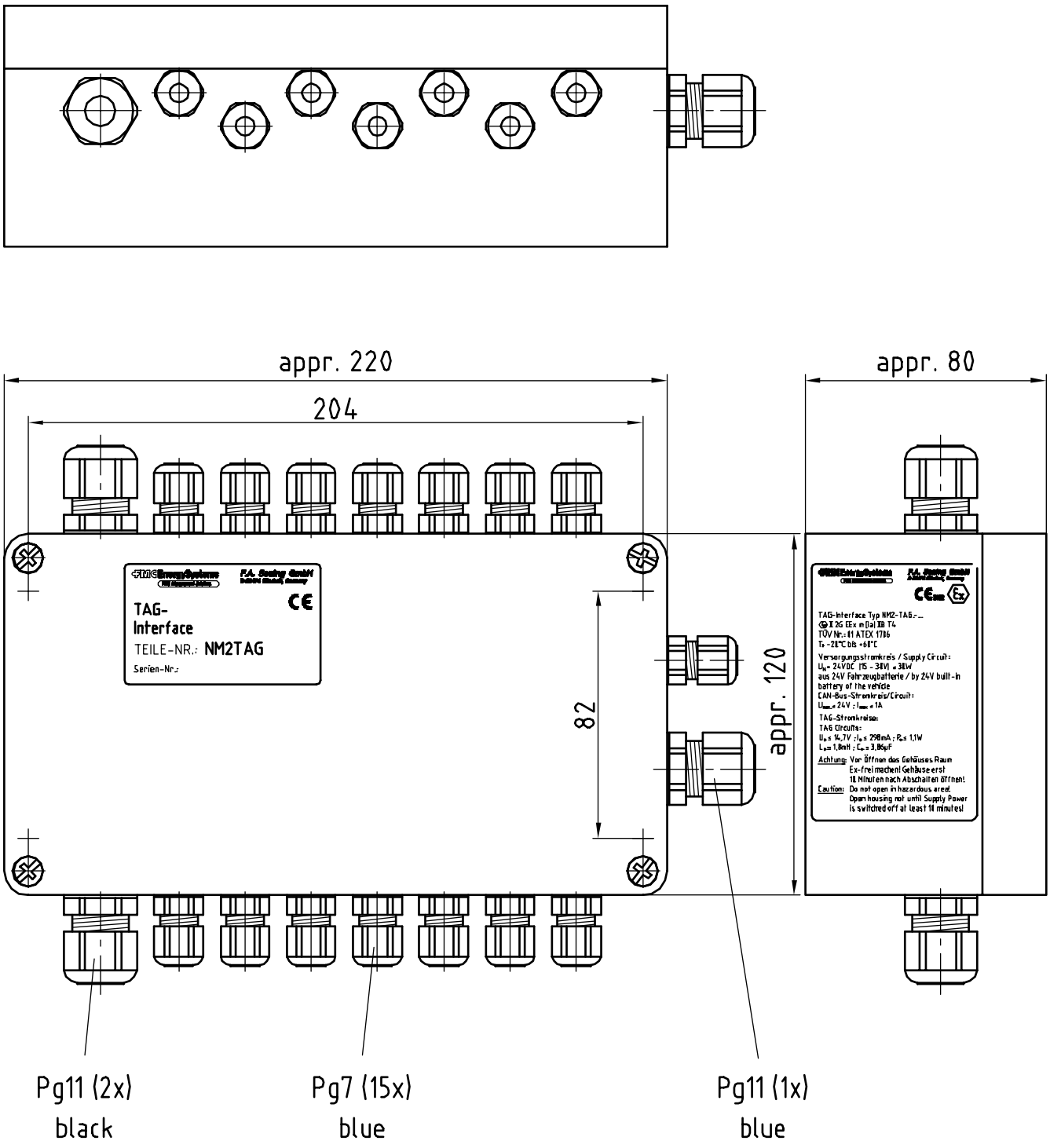

DOK-415E
"Schutzvermerk nach DIN 34 beachten"

TAG-Interface,
complete

FMC EnergySystems
FMC Measurement Solutions

F.A. Sening GmbH
D-25474 Ellerbek, Germany

3	Weight : kg	Date : 29.01.2003	Name : Benthack

Order No. NM2TAG

Changes :	Drawing No. E51.351335	Rev.

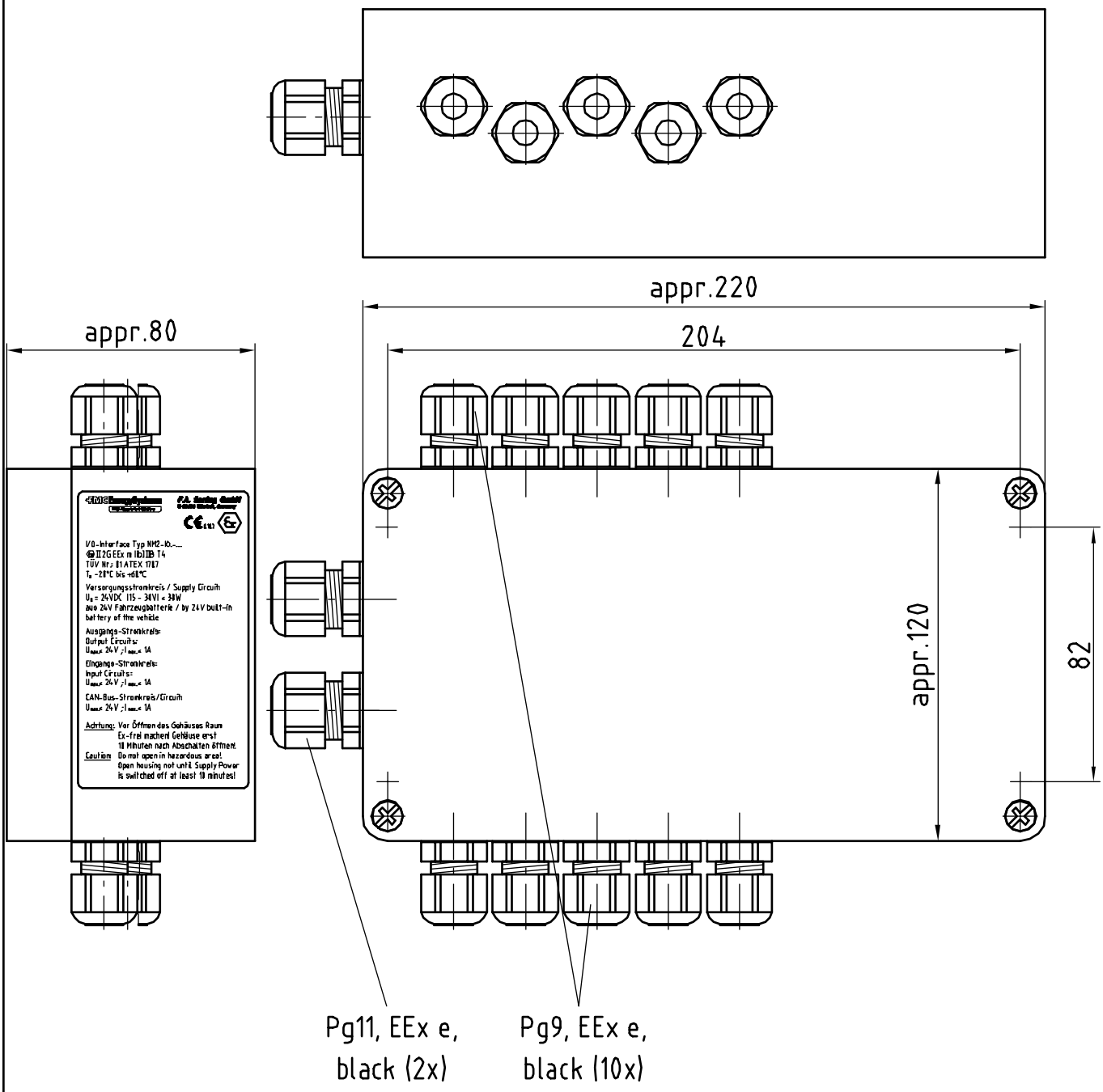

DOK-415E
"Schutzvermerk nach DIN 34 beachten"

I/O-Interface, complete	FMC EnergySystems FMC Measurement Solutions	F.A. Sening GmbH D-25474 Ellerbek, Germany	
	4	Weight : kg	Date : 29.01.2003	Name : Benthack
Order No. NM210	Changes :	Drawing No. E51.351466	Rev.

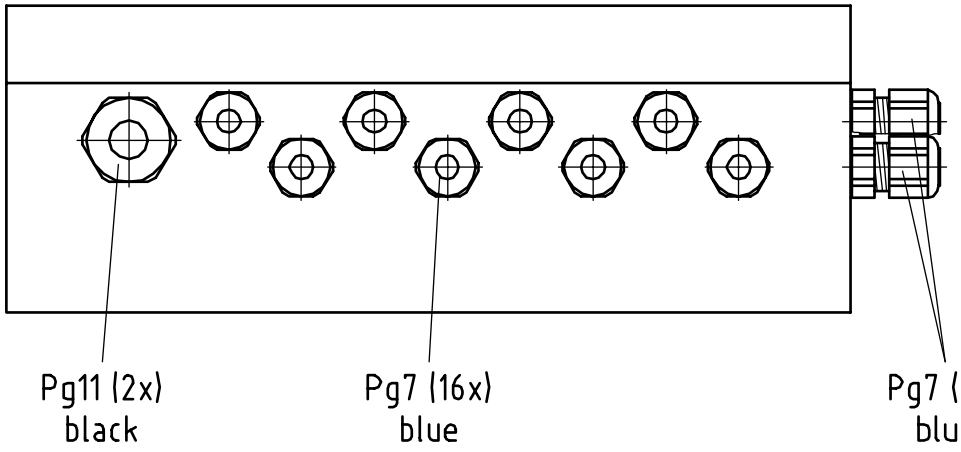

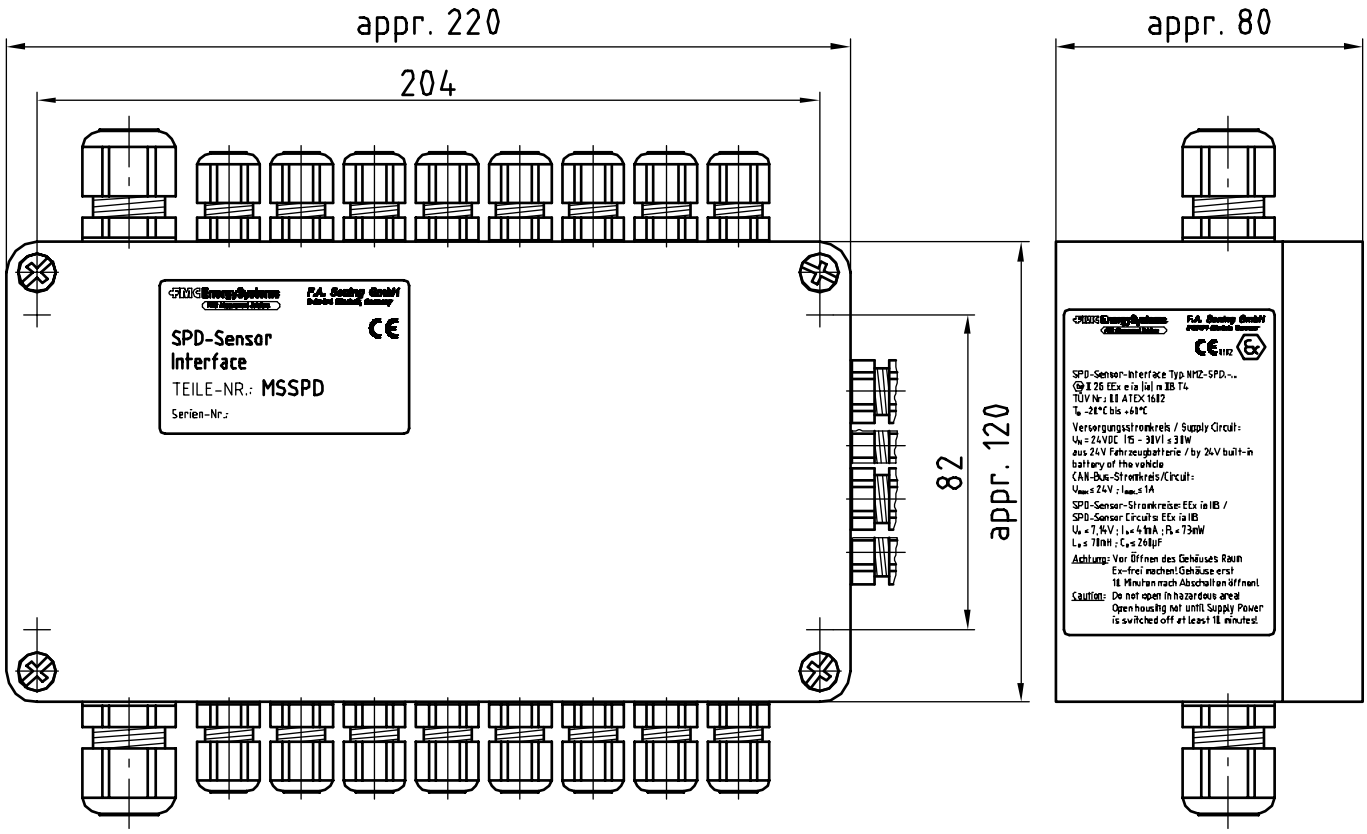

DOK-415E; DOK-416E
"Schutzvermerk nach DIN 34 beachten"

SPD-Sensor-Interface, complete	FMC EnergySystems FMC Measurement Solutions	F.A. Sening GmbH D-25474 Ellerbek, Germany	
	3	Weight : kg	Date : 22.11.2002
			Name : Benthack
Order No. MSSPD	Changes :	Drawing No. E51.351333	Rev.

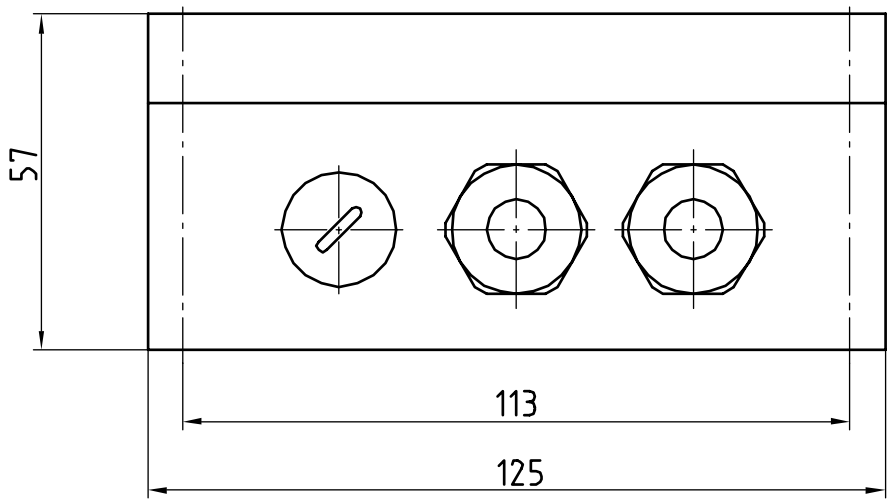

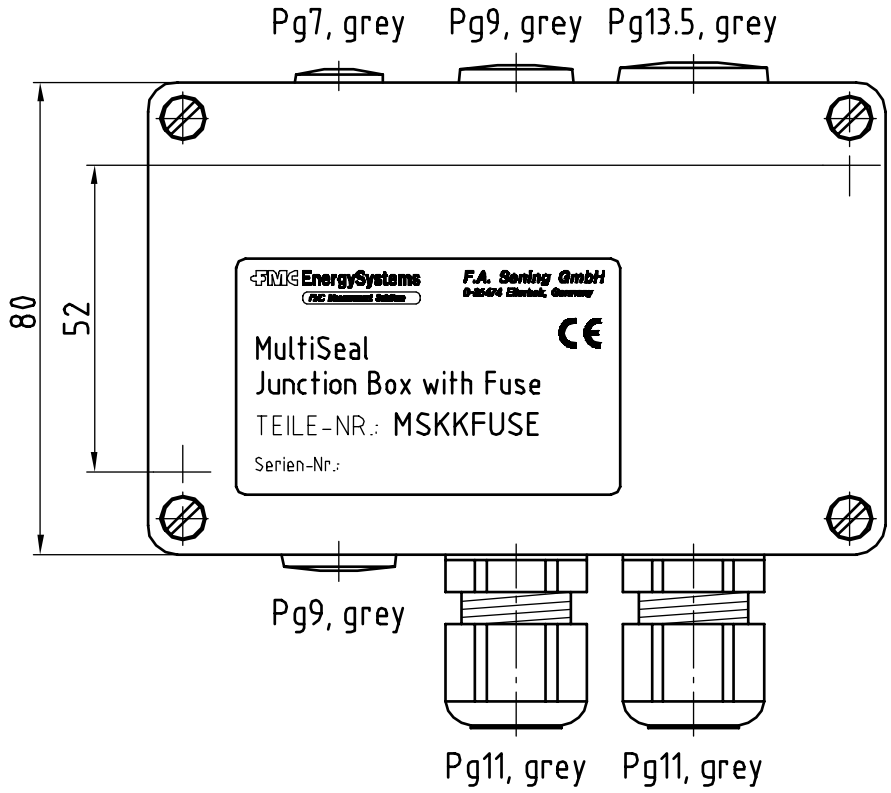

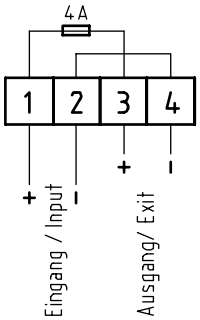

Ex-geschützte Sicherung
Ex-proof Fuse
e.g. Stahl 8560/51-4251

All dimensions in mm

Junction Box with Fuse, complete

FMC EnergySystems
FMC Measurement Solutions
F.A. Sening GmbH
Ellerbek, Germany

3	Gewicht : kg	Datum : 06.10.2000	Name : M. Kracht

Bestell–Nr. MSKKFUSE

Geänd. am : 16.11.01 NB; 21.03.03 Hm;

Zeichnungs–Nr. E51.351418

Rev. A

DOK-416E;DOK-415E
"Schutzvermerk nach DIN 34 beachten"

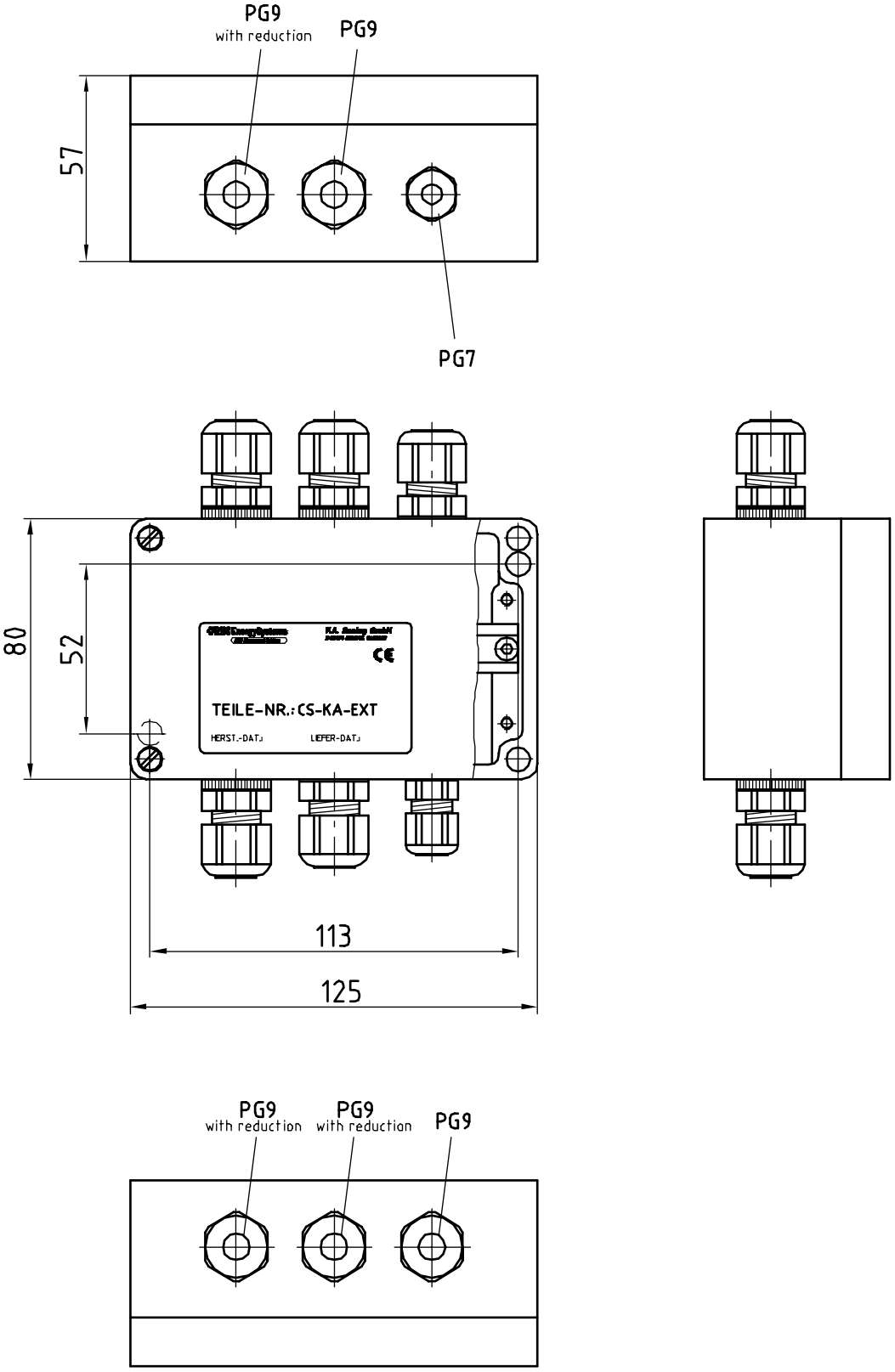

Connection diagram: 51.351502

All dimensions in mm

Junction box for extension of wires

FMC EnergySystems
FMC Measurement Solutions

F.A. Sening GmbH
Ellerbek, Germany

	Gewicht : kg	Datum :	Name :
		20.11.2001	Benthack

Bestell-Nr.	Geänd. am :	Zeichnungs-Nr.	Rev.
CS-KA-EXT		E51.351499	

DOK-416E; DOK-415E
"Schutzvermerk nach DIN 34 beachten"

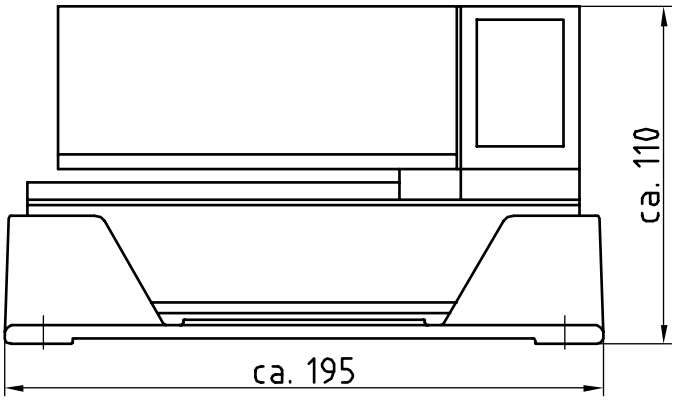

Reverse of printer

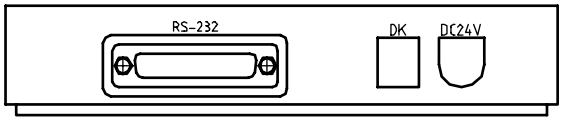

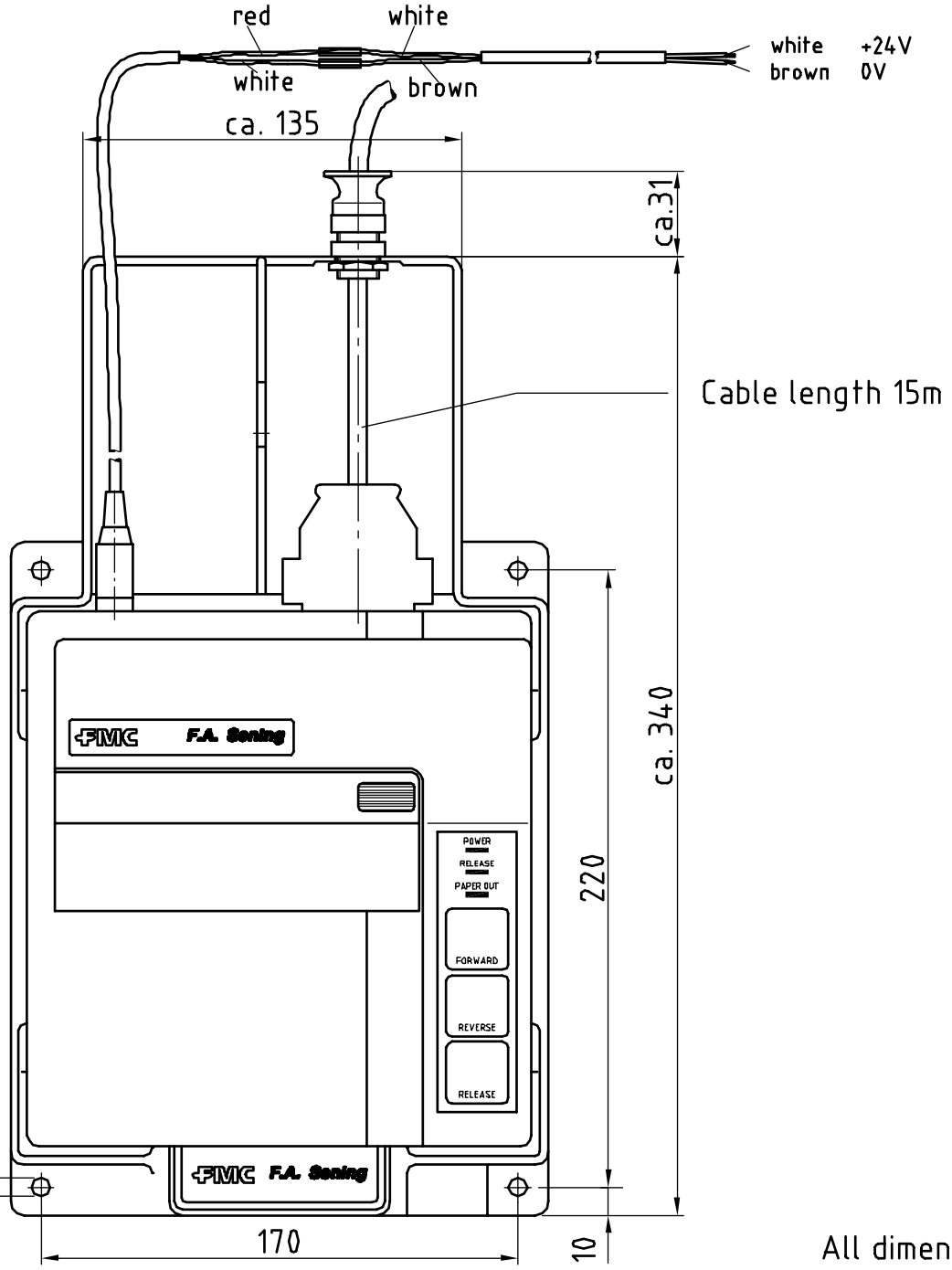

All dimensions in mm / m

Printer TM-295, 24 V complete

FMC EnergySystems
FMC Measurement Solutions

F.A. Sening GmbH
Ellerbek, Germany

4	Gewicht : kg	Datum : 19.11.2001	Name : Benthack

Bestell-Nr. DR-295

Geänd. am : 08.05.02 NB;	Zeichnungs-Nr. E51.350757	Rev.

DOK-415E
"Schutzvermerk nach DIN 34 beachten"

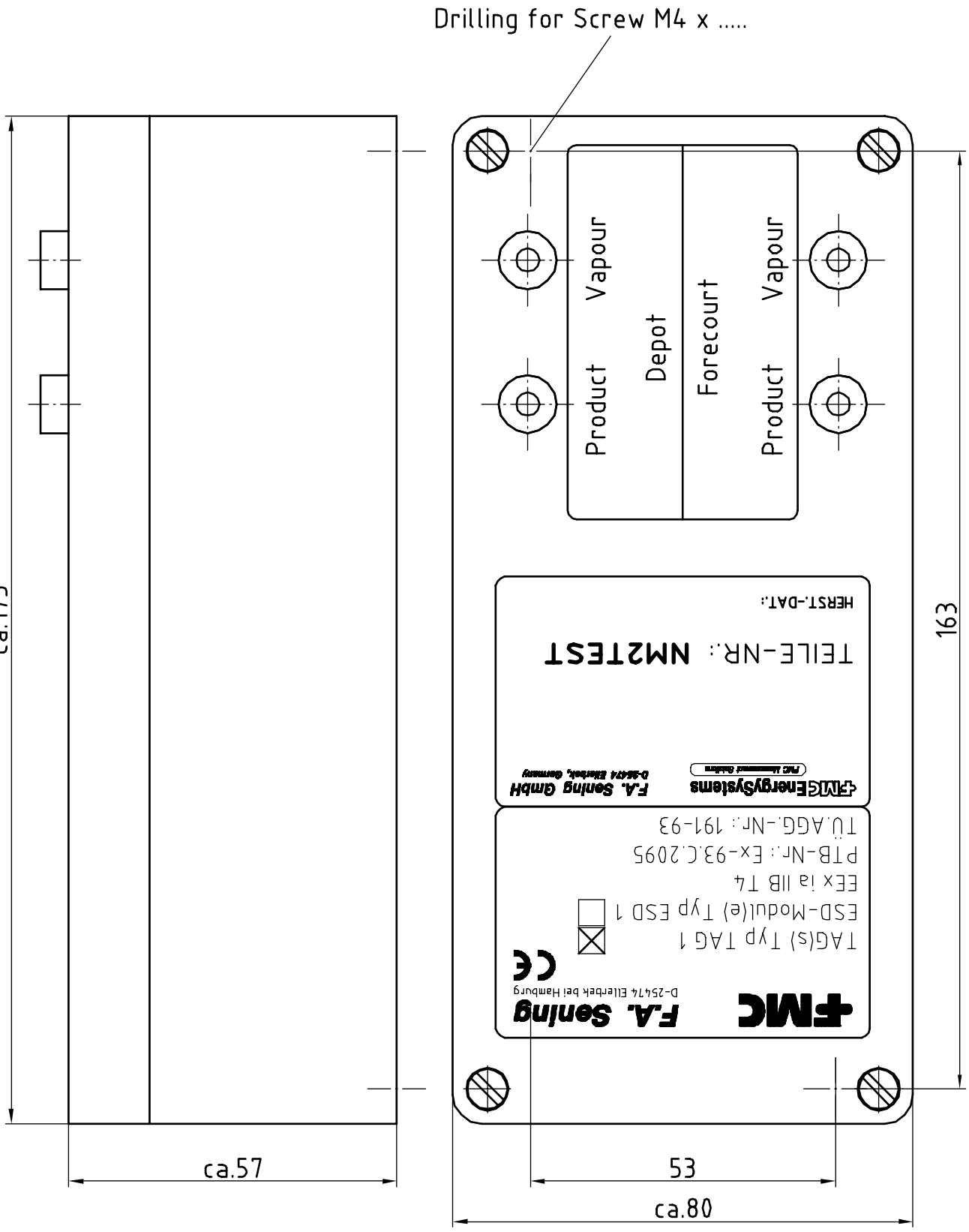

All dimensions in mm

NoMix 2000 Depot / Forecourt Simulation Unit	FMC EnergySystems FMC Measurement Solutions F.A. Sening GmbH Ellerbek, Germany		
	Gewicht : kg	Datum : 15.10.2001	Name : Benthack
Order-No. NM2TEST	Geänd. am : 21.01.02 NB; 18.03.02 NB;	Zeichnungs-Nr. E51.351529	Rev. B

DOK-415E
"Schutzvermerk nach DIN 34 beachten"

DOKV-45E

Trailer

Display-Interface (NM2DISPLAY)

LCD

51.351352

4 Battery
Int. CAN-Bus

Vehicle-
Battery

Main Unit (NM2MAIN)

51.351351

3 RS232 (Printer)

2 Cross section of the conduction wire ≥ 1,5mm²

For the Battery / Int. CAN-Bus wiring the F.A. Sening cable, Part-No.: NM2KABEL, must be used!

4 Battery/
Int. CAN-Bus

Caution!
The Trailer junction box (351441) must be installed outside the hazardous area.

351441

51.351444

Wetlegsensor-Interface (NM2WET)

CPU-Board

51.351346

Inputs
(EEx i)

Wetleg sensor 1 to 6

IN1=Main air pressure switch

4 Battery/
Int. CAN-Bus

SPD-Sensor-Interface (MSSPD)

CPU-Board

51.351347

SPD-Sensors

4 Battery/
Int. CAN-Bus

TAG-Interface (NM2TAG)

CPU-Board

E51.351478

comp. 1
comp. 2
comp. 3
comp. 4
comp. 5
comp. 6
Common Vapour
chassis

I/O-Interface (NM2IO)

CPU-Board

51.351468

MV1 (compartment 1)
MV2 (compartment 2)
MV3 (compartment 3)
MV4 (compartment 4)
MV5 (compartment 5)

4 Battery/
Int. CAN-Bus

Truck / Driver Cabin

DR-295
DIP-Switch position

DIP-Switch (SW1)

ON
OFF
OFF
OFF
OFF
ON
OFF
OFF
OFF
ON
OFF
ON

The DIP switches are located underneath the printer.

DR-298
DIP-Switch position

DIP-Switch (SW1)

OFF
OFF
ON
ON
OFF
ON
ON
ON
ON
ON

The DIP switches are located inside the printer underneath the cover (paper tray).

Caution: The installation in the driver cabin has to be executed according to the respective demands (IP).

From 24 Volt Vehicle Battery (30, permanent Power Supply)

MSKKFUSE

Fuse 4A

white (WH)
red (RD)
brown (BN)
white (WH)

Cross section of the conduction wire ≥ 1,5mm²

Spiralcable
(AK)

351442

RX (RS232)
TX (RS232)
GND
24V (30)
24V (30)
0V
0V
0V
24V (15)
24V (15)
Printer 2A

51.351443

3

Power OFF
switch
(optional)

2

brown
(BN)

Fuse
8A

From 24V
Vehicle Battery
(switched
Power Supply)

×The printer has to be powered from the switched Power 24V (15). Therefore the marked wire has to be disconnected at terminal 8 and connected at terminal 2.

Principle Wiring Diagram E11.351489

NoMix2000 & SPD-Functionality

System Wiring Diagram
permanent printer connection

FMC EnergySystems
FMC Measurement Solutions

F.A. Sening GmbH
Ellerbek, Germany

Geänd. am : 23.04.01 NB, 12.06.01 NB, 05.09.01 NB, 21.11.01 NB, 02.07.02 Hm.

Datum : 26.04.2001

Name : Benthack

Zeichnungs-Nr. E11.351488

Rev. D

"Schutzvermerk nach DIN 34 beachten"

NoMix 2000 / MultiSeal

System Wiring Diagram with
NM2MAINDISP / MSMAINDISP

Geänd. am :	Datum : 17.01.2003	Name : Arndt	Rev.
	Zeichnungs-Nr. E81.351676		

F.A. Sening GmbH, Ellerbek, Germany

FMC EnergySystems (FMC Measurement Solutions)

"Schutzvermerk nach DIN 34 beachten"

Spiral Cable

Caution!
The trailer junction box must be installed outside the hazardous area!

51.351444

Trailer Junction Box (351441)

1	24V (15)		red (RD) (1,5mm²)
2	24V (15)		
3	24V (15)		brown (BN) (1,5mm²)
4	0V		
5	0V		black (BK) (1,5mm²)
6	0V	0V	
7	24V (30)	+ 24V	blue (BU) (1,5mm²)
8	24V (30)		grey (GY)
9			pink (PK)
10			blue (BU)
11			red (RD)
12			white (WH)
13			brown (BN)
14	GND	white (WH)	green (GN)
15	TX (RS232)	brown (BN)	yellow (YE)
16	RX (RS232)	green (GN)	SHIELD
17		SHIELD	

Pg9

Pg16

51.351346

Wetlegsensor Interface (NM2WET)

CPU-Board

K7 NS6	3	blue (BU)	NS6
	2	black (BK)	
	1	brown (BN)	
K6 NS5	3	blue (BU)	NS5
	2	black (BK)	
	1	brown (BN)	
K5 NS4	3	blue (BU)	NS4
	2	black (BK)	
	1	brown (BN)	
K4 NS3	3	blue (BU)	NS3
	2	black (BK)	
	1	brown (BN)	
K3 NS2	3	blue (BU)	NS2
	2	black (BK)	
	1	brown (BN)	
K2 NS1	3	blue (BU)	NS1
	2	black (BK)	
	1	brown (BN)	
K1 Inputs	4	brown (BN)	IN2
	3	white (WH)	
	2	brown (BN)	IN1 Pressure switch NM2DSS
	1	white (WH)	

yellow (YE)	4	CAN -	4	yellow (YE)
green (GN)	3	CAN +	3	green (GN)
brown (BN)	2	0 Volt	2	brown (BN)
white (WH)	1	+24 Volt	1	white (WH)

Battery
Int. CAN-Bus
4

Sening

Battery
Int. CAN-Bus
4

RS232
Printer
3

Cross Section of the
Conduction Wire ≥ 1,5mm²
2

To the other NoMix 2000 /
MultiSeal Interface Units

For the battery / Int. CAN-bus wiring the F.A. Sening
cable, part no. NM2KABEL, must be used

8	RX	TX	5	brown (BN)
				green (GN)
7	Ext CAN +	Ext CAN -	4	
green (GN) 6	Int CAN +	Int CAN -	3	
yellow (YE)				
brown (BN) 2	0 Volt		2	white (WH)
				0 Volt
white (WH) 1	+ 24 Volt		1	Plus 24V

MultiSeal Mainunit / Display (MSMAINDISP)
NoMix 2000 Main Unit / Display (NM2MAINDISP)

LCD

51.351673

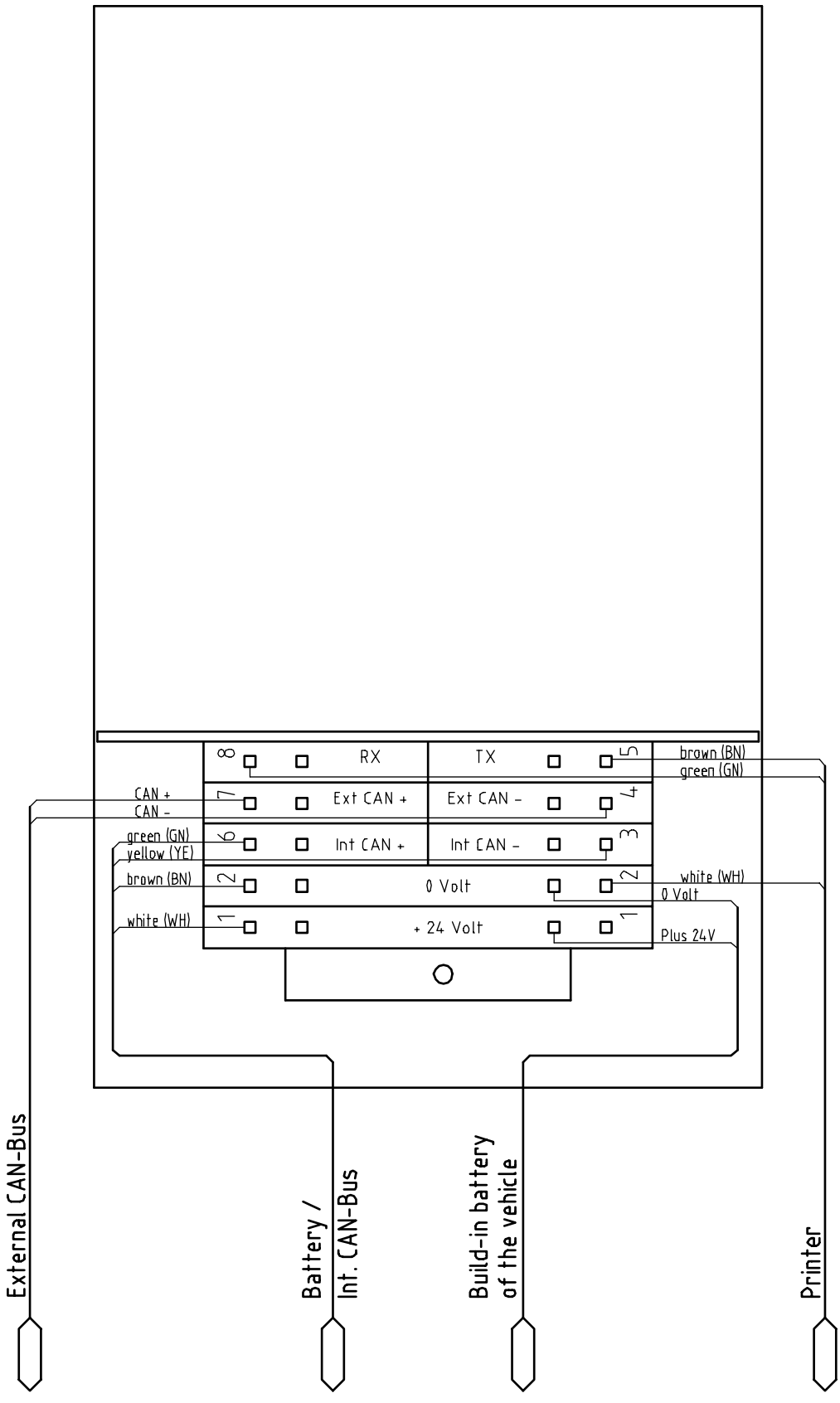

NoMix 2000 / MultiSeal

Wiring diagram
Main Unit
(NM2MAIN / MSMAIN)

FMC EnergySystems
FMC Measurement Solutions

F.A. Sening GmbH
D-25474 Ellerbek, Germany

Changes :	Date : 19.11.2002	Name : Benthack
	Drawing No. E51.351351	Rev.

DOK-415E; DOK-416E
"Schutzvermerk nach DIN 34 beachten"

For use at NoMix 2000 the name has to be changed from MultiSeal to NoMix 2000. Therefore take out the stripe with the name, insert it in the mirrored position and fix it with tape.

DOK-415E; DOK-416E
"Schutzvermerk nach DIN 34 beachten"

NoMix 2000 / MultiSeal

Wiring diagram
Display Interface
(NM2Display)

FMC EnergySystems

F.A. Sening GmbH
Ellerbek, Germany

Geänd. am :	Datum : 12.11.2001	Name : Benthack
	Zeichnungs–Nr. E51.351352	Rev.

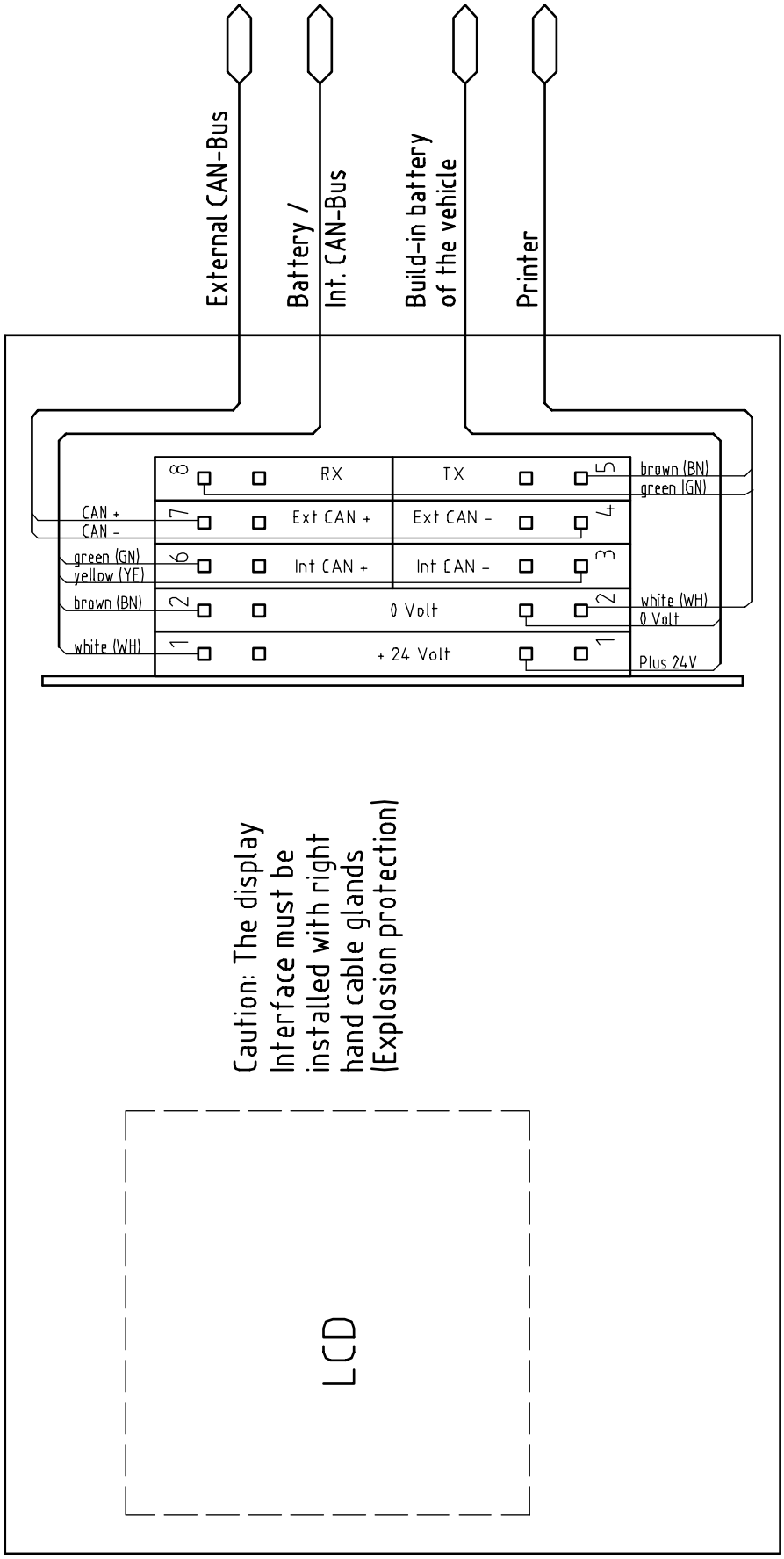

NoMix 2000 / MultiSeal

Wiring Diagram Main Unit / Display (NM2MAINDISP / MSMAINDISP)

FMC EnergySystems
FMC Measurement Solutions

F.A. Sening GmbH
D-25474 Ellerbek, Germany

Changes :	Date :	Name :
	14.01.2003	Benthack
	Drawing No.	Rev.
	E51.351673	

DOK-415E; DOK-416E
"Schutzvermerk nach DIN 34 beachten"

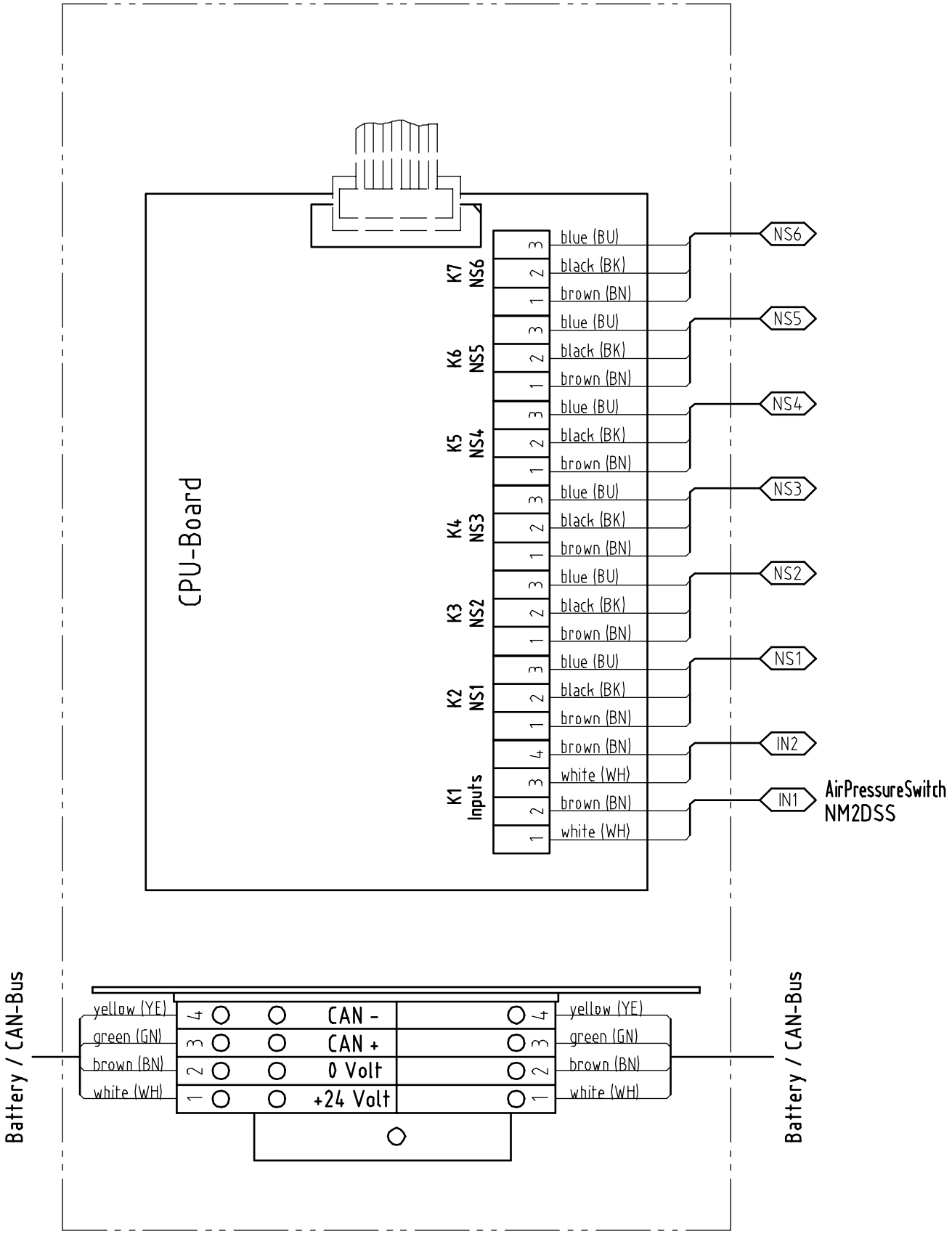

NoMix 2000 / MultiSeal

Wiring diagram
Wetlegsensor-Interface
(NM2WET)

FMC EnergySystems
FMC Measurement Solutions

F.A. Sening GmbH
D-25474 Ellerbek, Germany

Changes :	Date : 19.11.2002	Name : Benthack
	Drawing No. E51.351346	Rev.

DOK-415E; DOK-416E
"Schutzvermerk nach DIN 34 beachten"

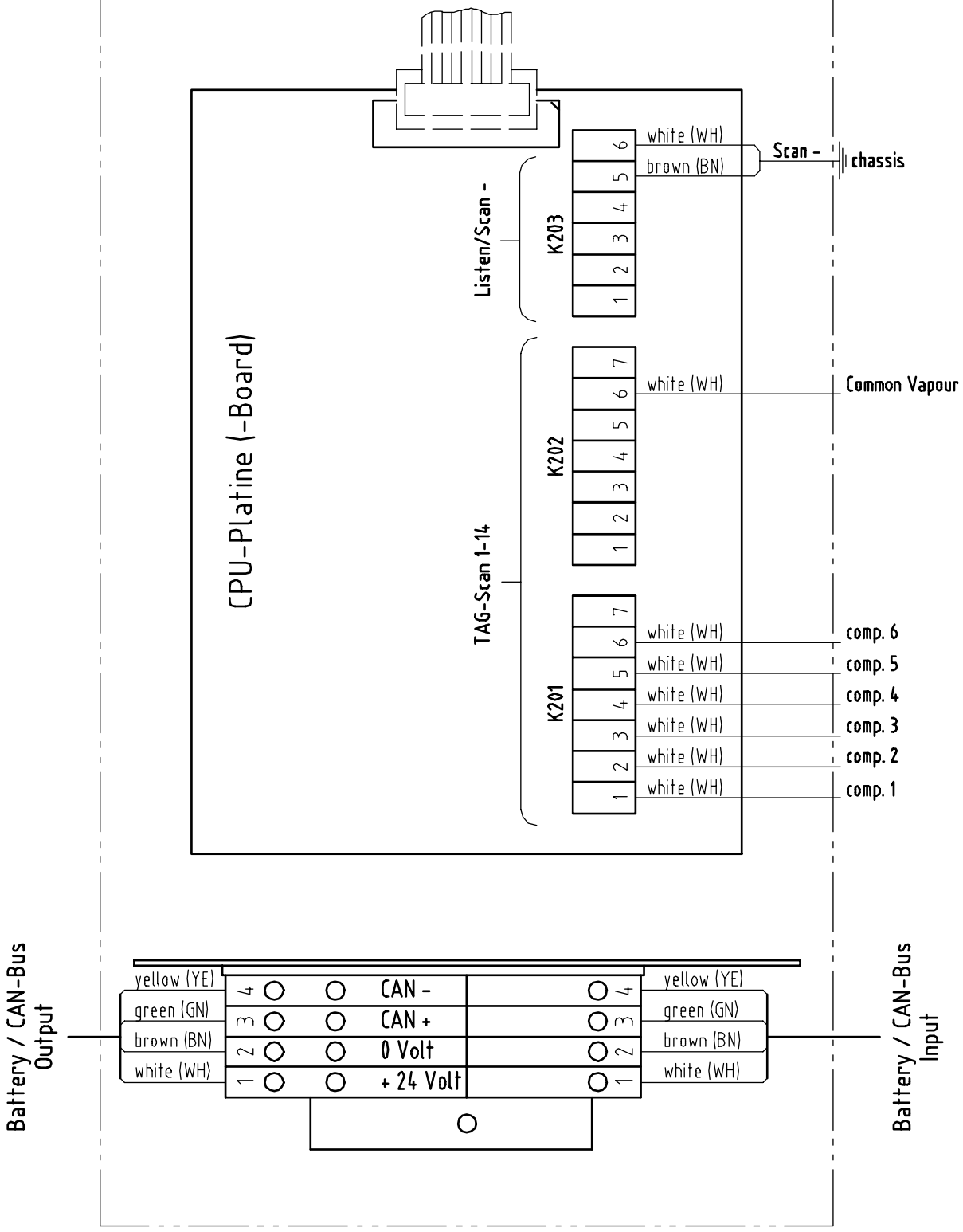

NoMix 2000

Wiring Diagram
TAG-Interface
(NM2TAG)

FMC EnergySystems
FMC Measurement Solutions

F.A. Sening GmbH
Ellerbek, Germany

Geänd. am :	Datum :	Name :
03.09.01 RA; 03.12.01 NB;	30.03.2001	Benthack

Zeichnungs–Nr.: E51.351478

Rev.: B

DOK-415E;
"Schutzvermerk nach DIN 34 beachten"

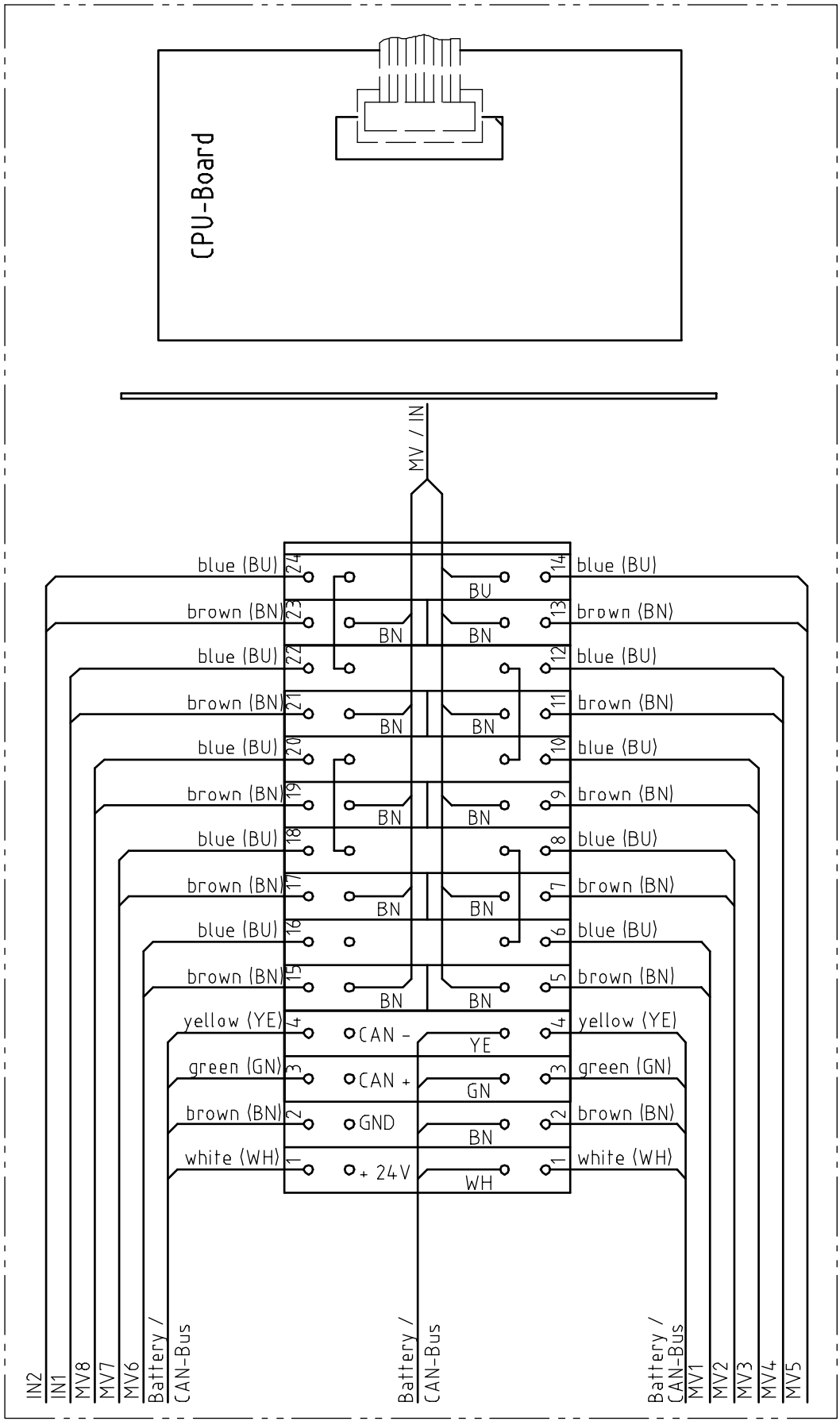

NoMix 2000

Wiring diagram
I/O - Interface
(NM210)

FMC EnergySystems
FMC Measurement Solutions

F.A. Sening GmbH
D-25474 Ellerbek, Germany

Changes :	Date : 29.01.2003	Name : Benthack
	Drawing No. E51.351468	Rev.

DOK-415E
"Schutzvermerk nach DIN 34 beachten"

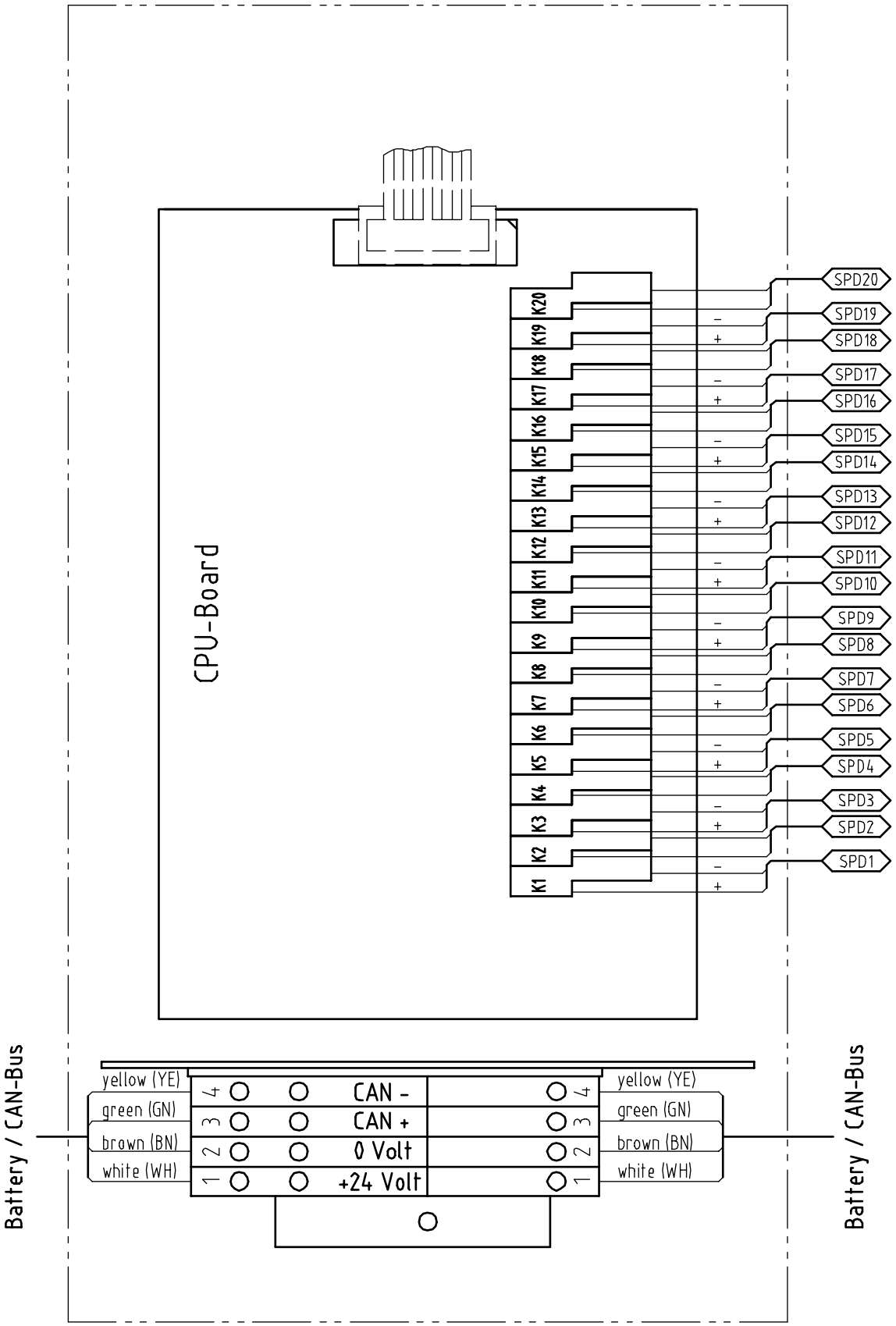

NoMix 2000 / MultiSeal

Wiring diagram SPD-Sensor-Interface (MSSPD)

FMC EnergySystems
FMC Measurement Solutions

F.A. Sening GmbH
D-25474 Ellerbek, Germany

Changes :	Date : 19.11.2002	Name : Benthack
	Drawing No. E51.351347	Rev.

DOK-415E; DOK-416E
"Schutzvermerk nach DIN 34 beachten"

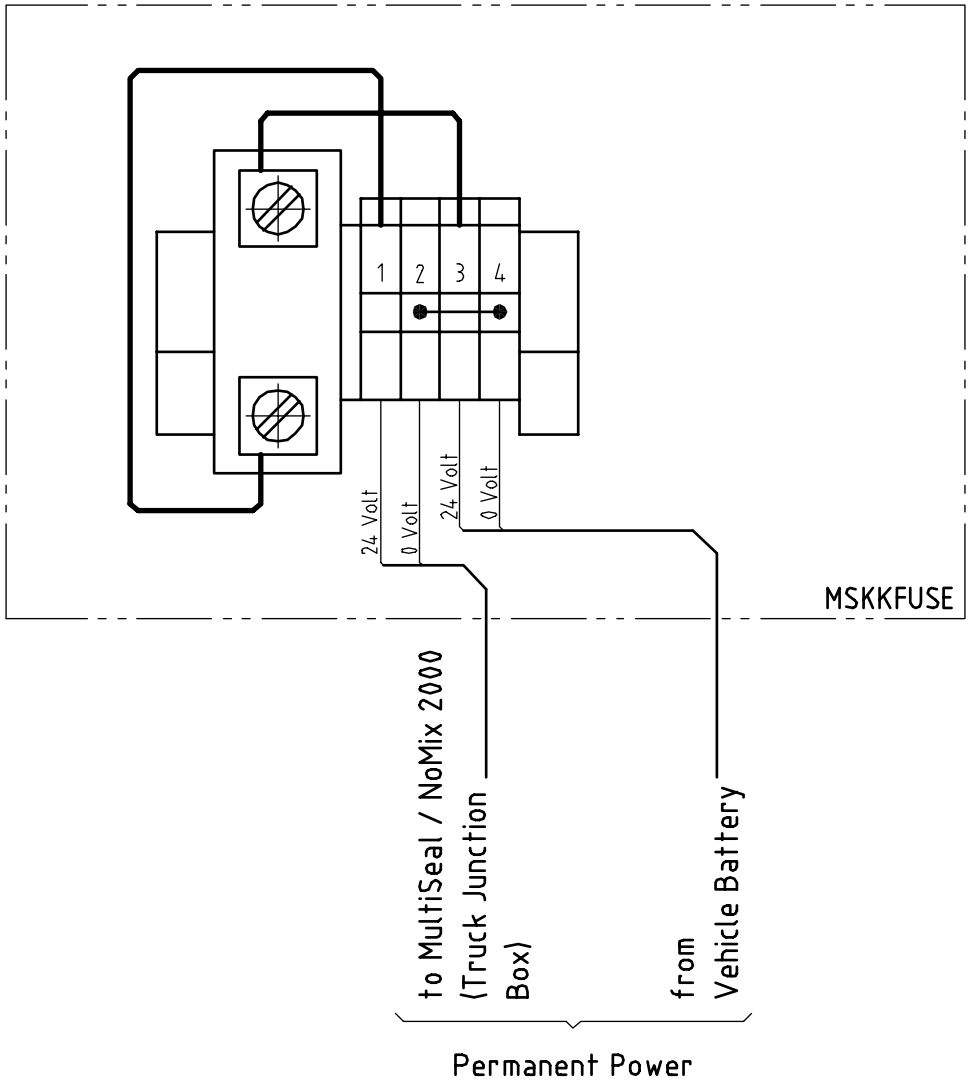

DOK-416E;DOK-415E
"Schutzvermerk nach DIN 34 beachten"

MultiSeal / NoMix 2000

Wiring diagram
Junction Box with Fuse

FMC EnergySystems
FMC Measurement Solutions

F.A. Sening GmbH
Ellerbek, Germany

Geänd. am :	Datum :	Name :
10.08.01 NB; 16.11.01 NB;	05.10.2000	M. Kracht

Zeichnungs–Nr.	Rev.
E51.351419	A

CPU-Circuit,
Connection to
Power Supply, EEx ia IIB

EPROM

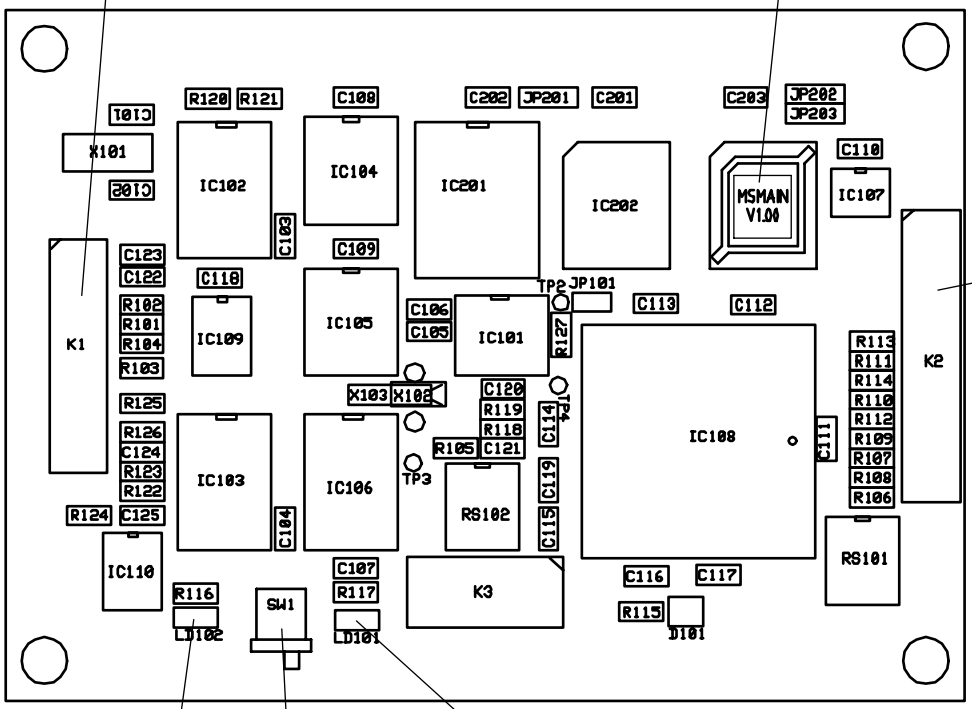

Connector for
Extension

SETUP-
Switch

Power Supply
Indication

SETUP-LED: lighting = SETUP
released
not lighting = SETUP
not released

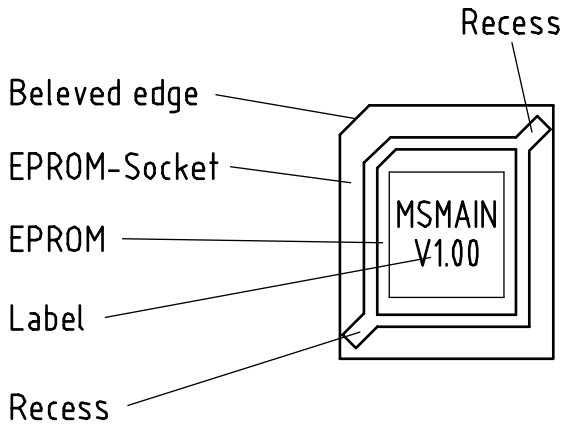

CAUTION: To remove the EPROM from the base, a special PLCC removal tool must be used (see also instruction).

MultiSeal Main Unit	FMC EnergySystems (FMC Measurement Solutions) F.A. Sening GmbH Ellerbek, Germany	
EPROM-Removal / SETUP-Switch Main CPU-Board - Instruction manual -	Geänd. am :	Datum : 31.08.2000 / Name : M. Kracht
		Zeichnungs-Nr. E51.351371 / Rev.

DOK-416E
"Schutzvermerk nach DIN 34 beachten"

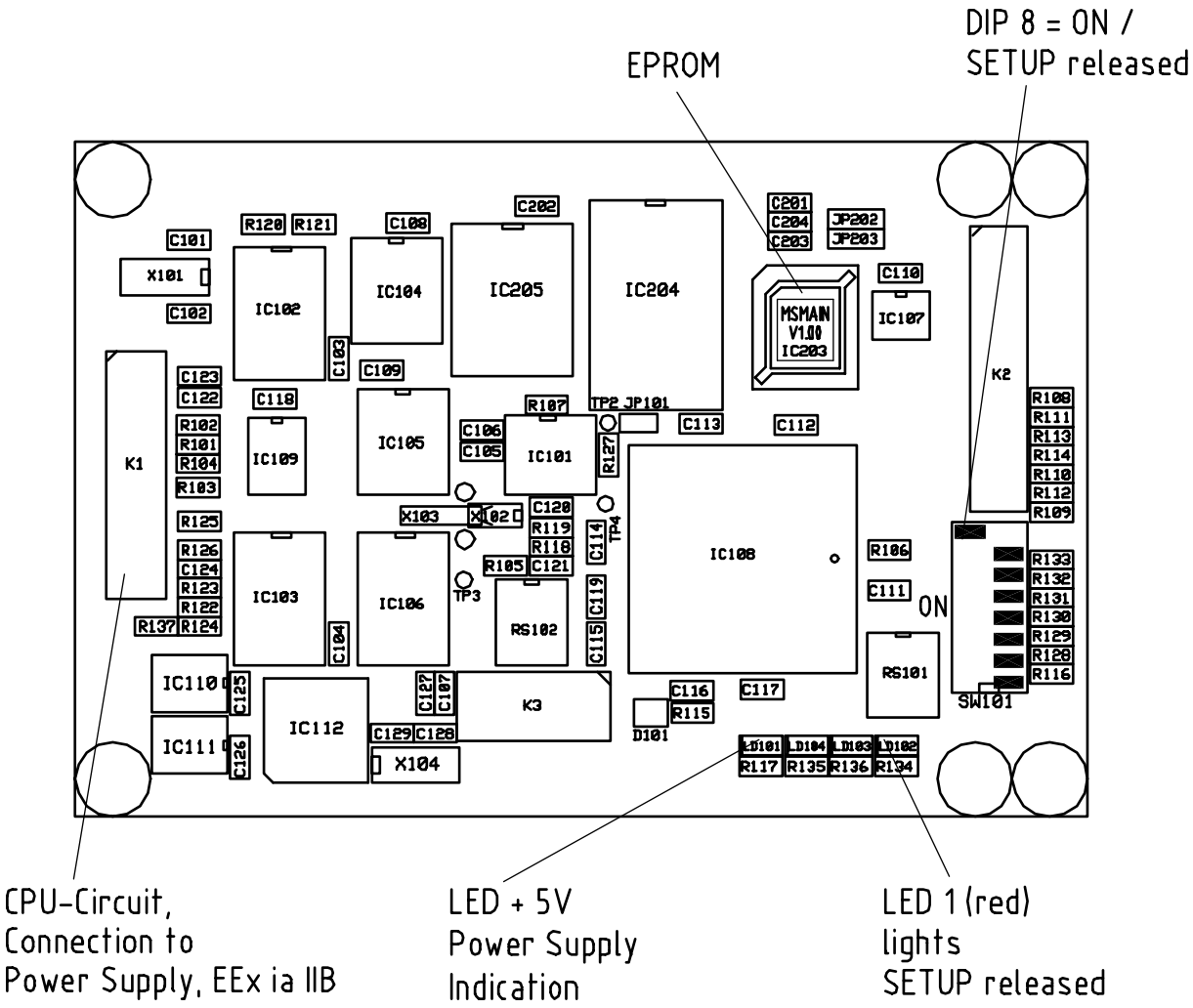

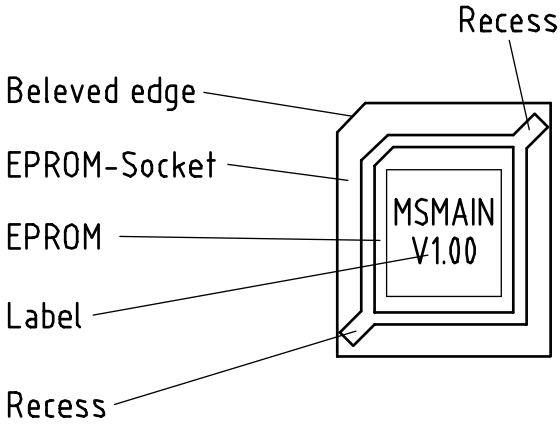

CAUTION: To remove the EPROM from the base, a special PLCC removal tool must be used (see also instruction DOK-415E and DOK-416E).

NoMix 2000/MultiSeal Main Unit / Display	FMC EnergySystems FMC Measurement Solutions	F.A. Sening GmbH D-25474 Ellerbek, Germany	
EPROM-Removal / SETUP-Switch Main CPU-Board - Instruction Manual -	Changes :	Date : 29.01.2003	Name : Benthack
		Drawing No. E51.351675	Rev.

DOK-415E; DOK-416E
"Schutzvermerk nach DIN 34 beachten"

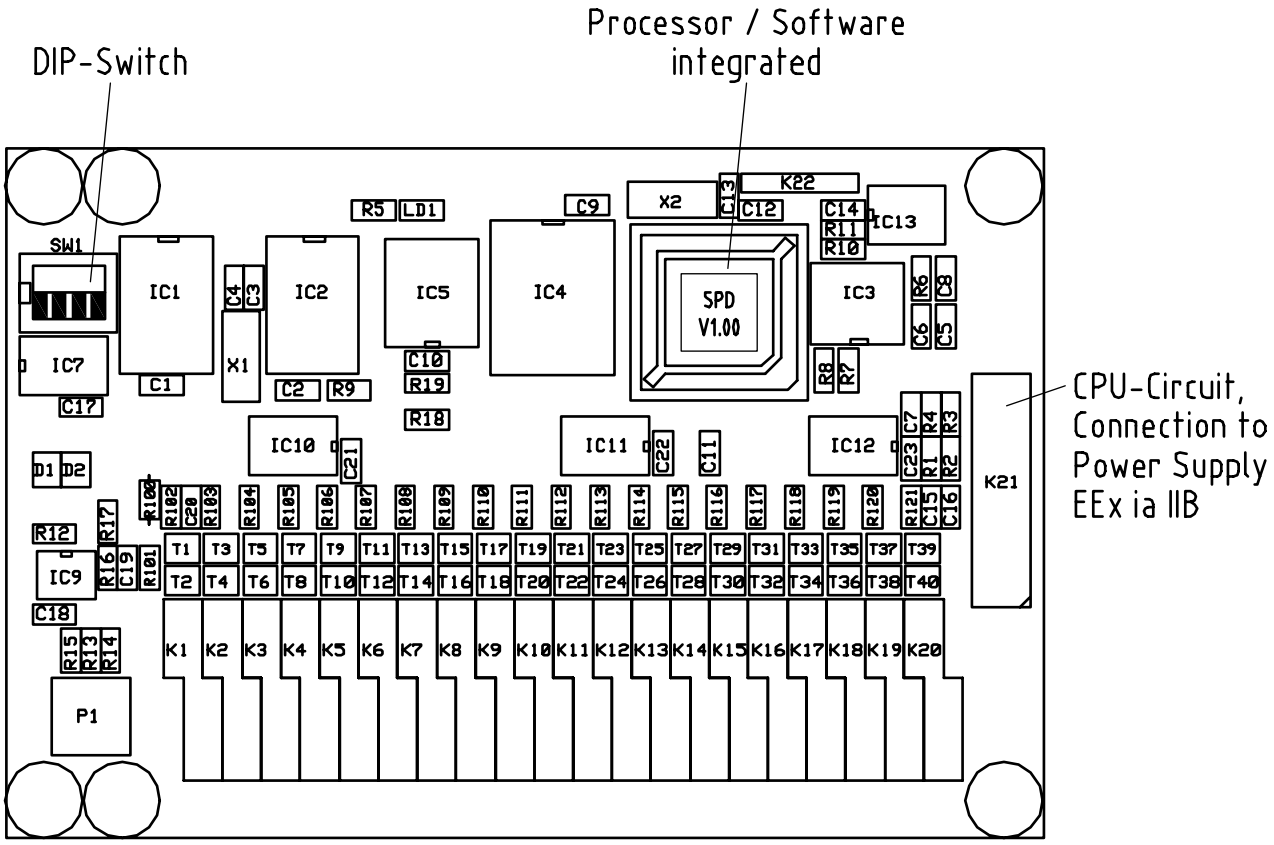

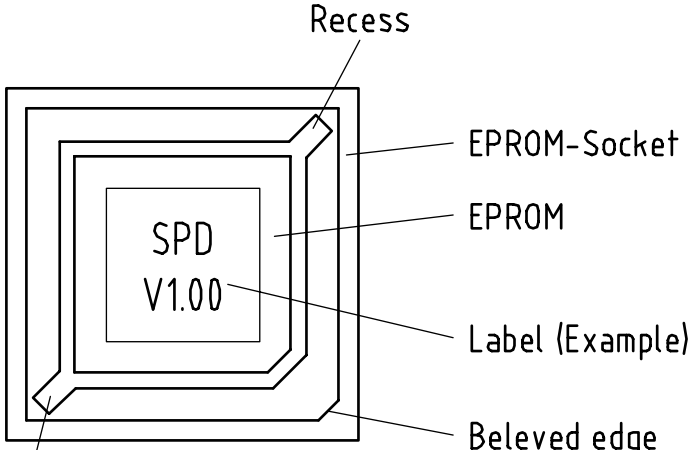

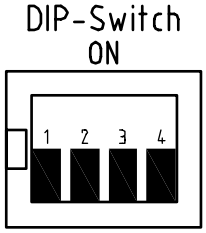

1-3: SPD-Sensor-Interface Adress

4 : Battery switch

4 = ON : Internal Battery is switched On

4 = OFF : Internal Battery is switched Off

IMPORTANT: Before removal of the processor the Dipswitch 4 must be moved to "OFF" (Internal Battery switched off).

CAUTION: To remove the EPROM from the base, a special PLCC removal tool must be used (see also instruction).

MultiSeal Interfaces

Processor / Software-Removal

CPU-Boards

- Instruction manual -

FMC EnergySystems
FMC Measurement Solutions

F.A. Sening GmbH
Ellerbek, Germany

Geänd. am :	Datum : 31.08.2000	Name : M. Kracht
	Zeichnungs-Nr. E51.351372	Rev.

DOK-416E
"Schutzvermerk nach DIN 34 beachten"

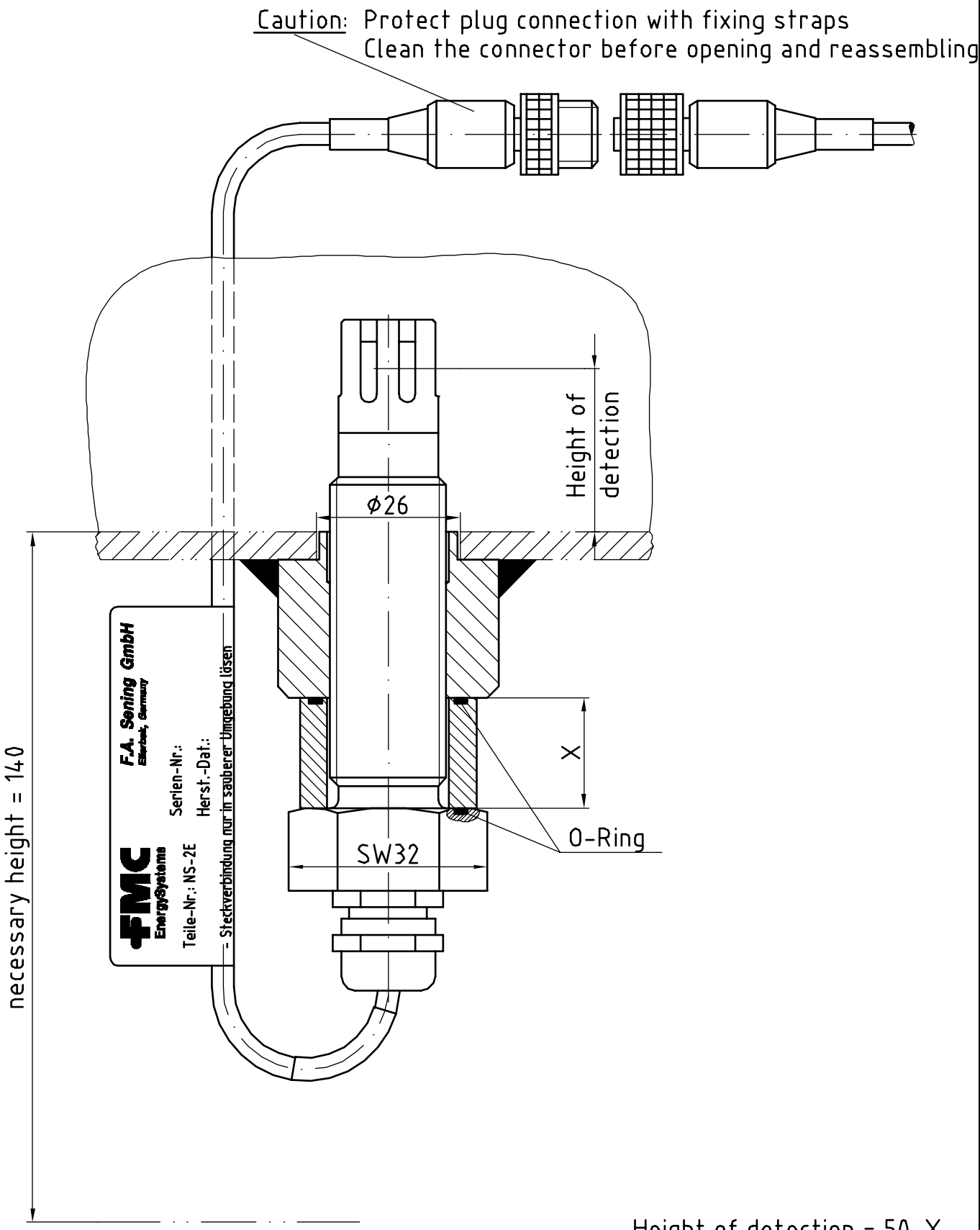

Height of detection = 50-X

$X_{min} = 0$; $X_{max} = 40$

Sensor NS-2E, complete	FMC EnergySystems / FMC Measurement Solutions — F.A. Sening GmbH, Ellerbek, Germany		
	3	Gewicht: kg	Datum: 19.11.2001 — Name: Benthack
Bestell-Nr. NS-2E	Geänd. am:	Zeichnungs-Nr. E51.351307	Rev.

DOK-415E;DOK-416E
"Schutzvermerk nach DIN 34 beachten"

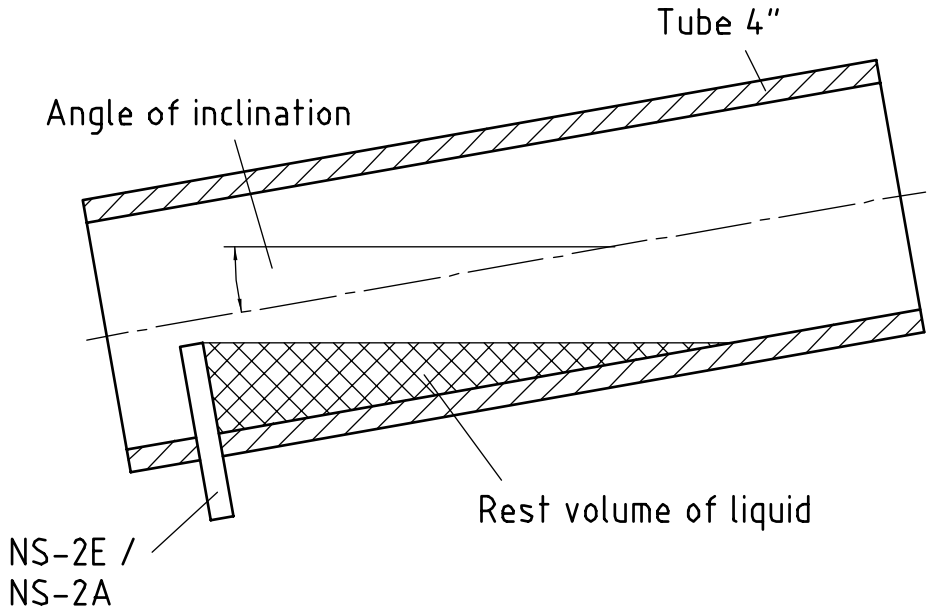

Figure: Rest volume of liquid behind the NS-2E / NS-2A

Hight of operation in [mm]	Inclination angle of the tube [Grade]				
	1	2	3	4	5
20	0.5	0.3	0.2	0.1	0.1
30	1.4	0.7	0.5	0.4	0.3
40	2.8	1.4	0.9	0.7	0.6
50	4.8	2.4	1.6	1.2	1.0

Rest volume of liquid behind the NS-2E / NS-2A in [Liter]

Table: Calculated rest volume of liquid

DOK-415E; DOK-416E
"Schutzvermerk nach DIN 34 beachten"

Rest volume
behind the NS-2E / NS-2A

FMC EnergySystems
FMC Measurement Solutions

F.A. Sening GmbH
Ellerbek, Germany

Geänd. am :	Datum :	Name :
31.08.00 MK.;	02.06.1997	M. Kracht

Zeichnungs-Nr.	Rev.
E51.350839	

DOK-415E

Screws with resistor cable installation for ESD

Outlet side (API-Coupling) Vehicle side (Chassis)

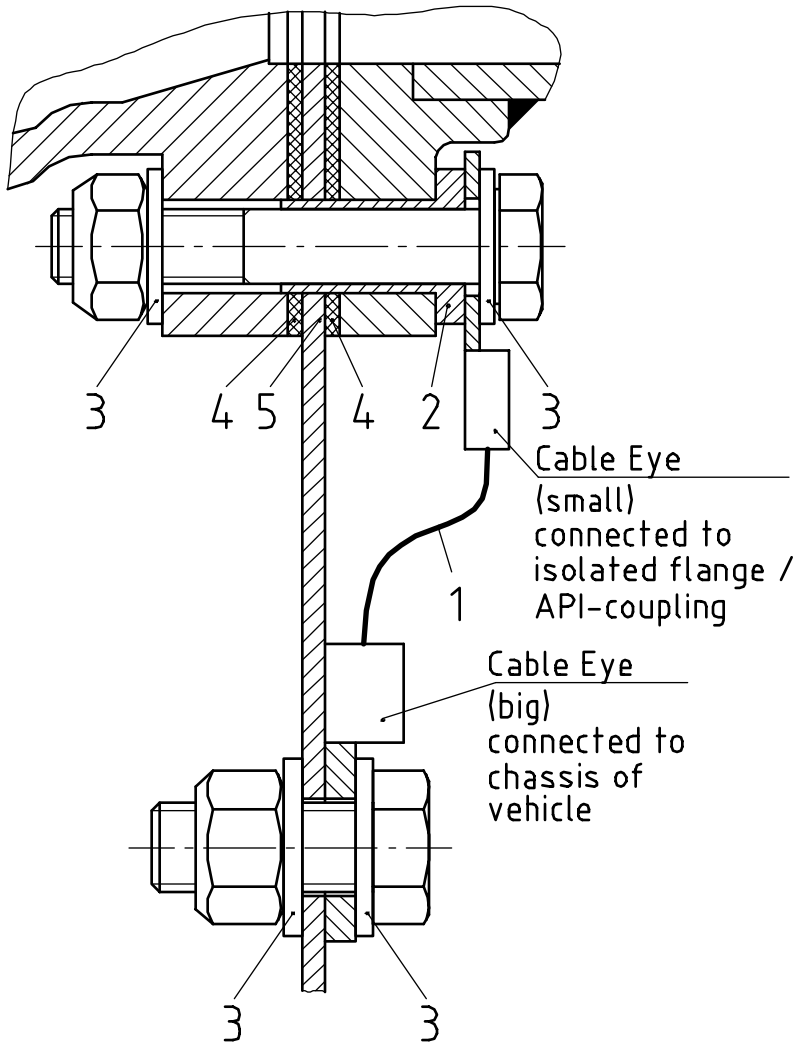

Screw with angle bracket

Outlet side (API-Coupling) Vehicle side (Chassis)

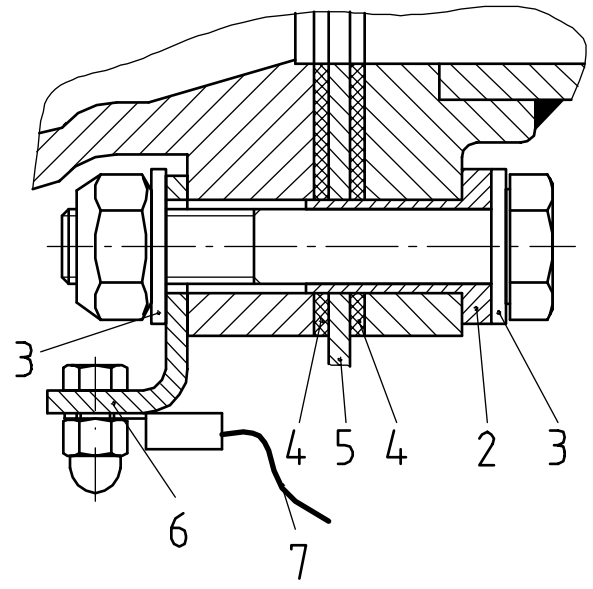

All other srews

Outlet side (API-Coupling) Vehicle side (Chassis)

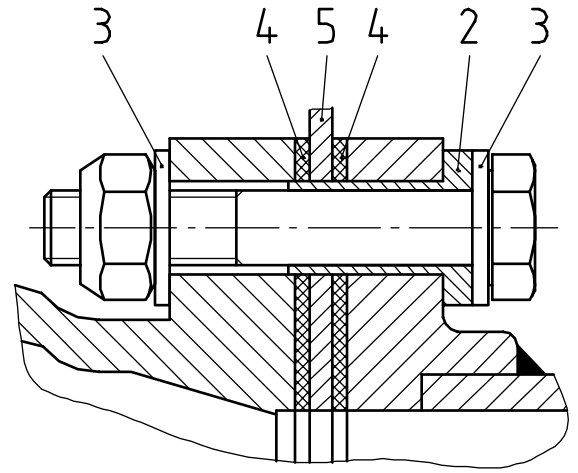

1. Resistor cable with cable eyes
2. Isolation bush
3. Washer
4. Gasket
5. Cock plate
6. Angle bracket (part. no. ASS-GW-AW80)
7. TAG-Scan wire

Installation

- dismatle flange / API-coupling
- replace srews M12 with M10 and M10 with M8
- in case of less room for fitting use flat nuts and if needed also threaded rods instead of screws
- always take new gaskets
- mount all srews and isolation bushes according the drawing above. The isolation bushes have to be shortened when necessary. Tighten the screws with a maximum of 20 Nm.

Importend: resistor cable installation

- to ensure electrostatic discharge (ESD) the isolated flange / API-coupling must be connected with the chassis of the vehicle using a resistor cable, part no. ASS-GW-ESA (Pos. 1)
- mount srews according to the drawing on the left
- install the small cable eye always towards the isolated flange / API-coupling
- install the big cable eye always towards the chassis of the vehicle / cock plate
- a value of 100 KOhm must be measured between the isolated flange / API-coupling and chassis using a standard ohmmeter

Position of Angle bracket for TAG-Scan wire

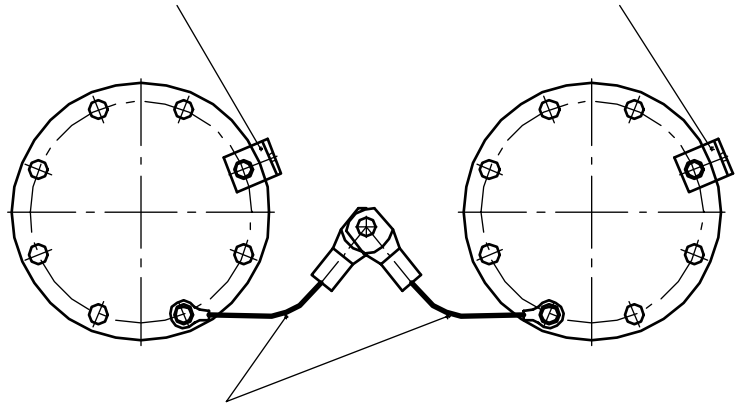

Position of Resistor cable with cable eyes

"Schutzvermerk nach DIN 34 beachten"

NoMix 2000	FMC EnergySystems / FMC Measurement Solutions	F.A. Sening GmbH D-25474 Ellerbek, Germany	
Flange / API-Coupling Isolation	Geänd. am : 12.08.02 Oel.	Datum : 03.05.2001	Name : R. Arndt
		Zeichnungs-Nr. E61.351490	Rev. A

Outlet side

Truck side

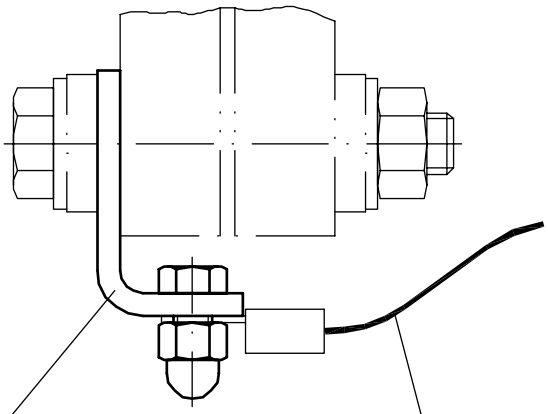

Fix angle at underside of flange. Protect cable with fixing straps.

TAG-Scan wire:

Connect TAG-Scan wire at TAG-Interface NM2TAG

DOK-415E
"Schutzvermerk nach DIN 34 beachten"

Angle for TAG-Scan wire connection at flange

FMC EnergySystems
FMC Measurement Solutions

F.A. Sening GmbH
Ellerbek, Germany

4	Gewicht : kg	Datum : 20.11.2001	Name : Benthack

Bestell-Nr. ASS-GW-AW80

Geänd. am :	Zeichnungs-Nr. E51.250226	Rev.

Truck Chassis

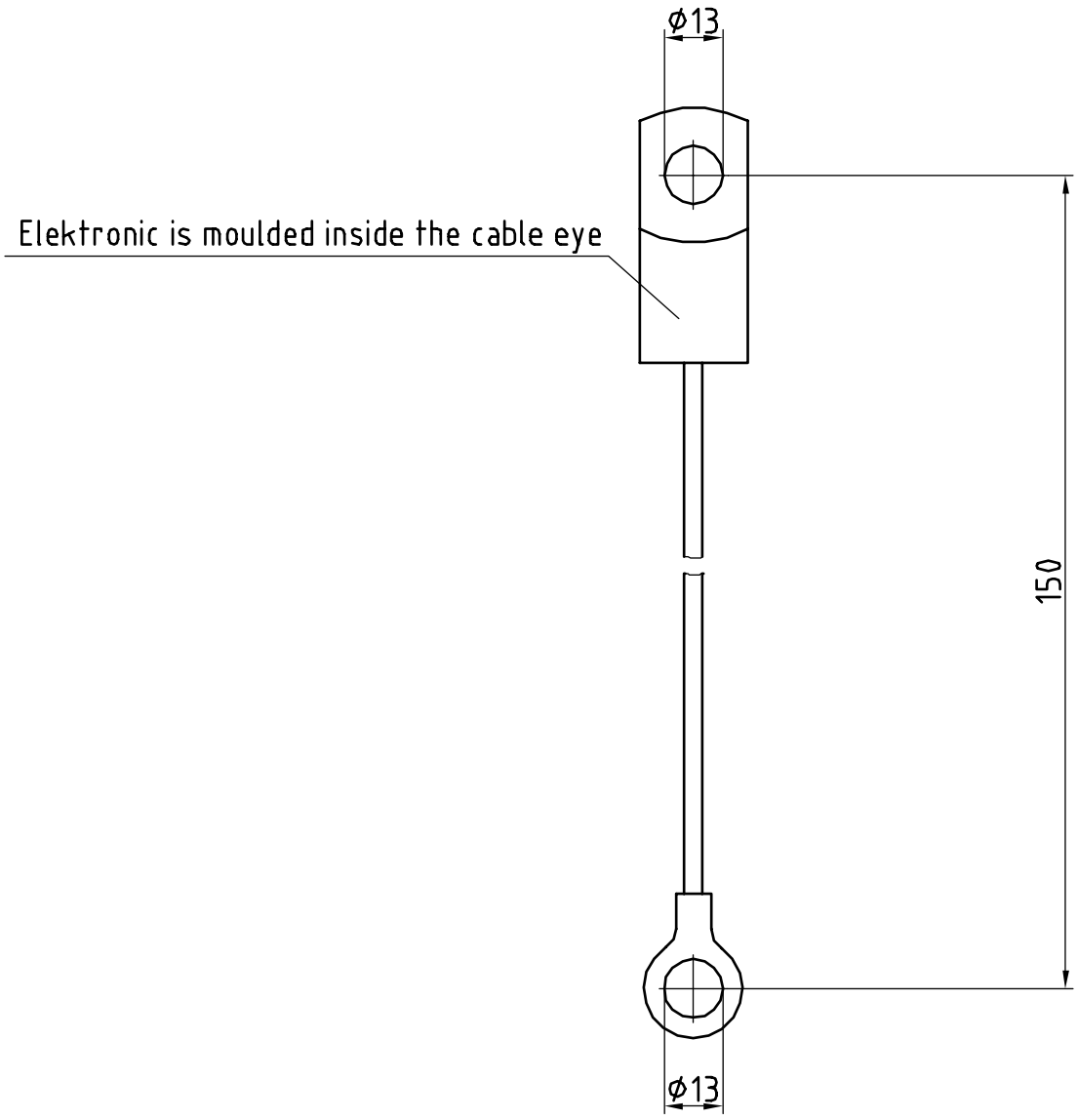

isolated outlet

All dimensions in mm

ESD-Resistor flange	FMC EnergySystems (FMC Measurement Solutions) F.A. Sening GmbH Ellerbek, Germany			
	4	Gewicht : kg	Datum : 12.11.2001	Name : Benthack
Bestell-Nr. ASS-GW-ESA	Geänd. am :	Zeichnungs-Nr. E51.350228		Rev.

DOK-415E
"Schutzvermerk nach DIN 34 beachten"

Truck Chassis

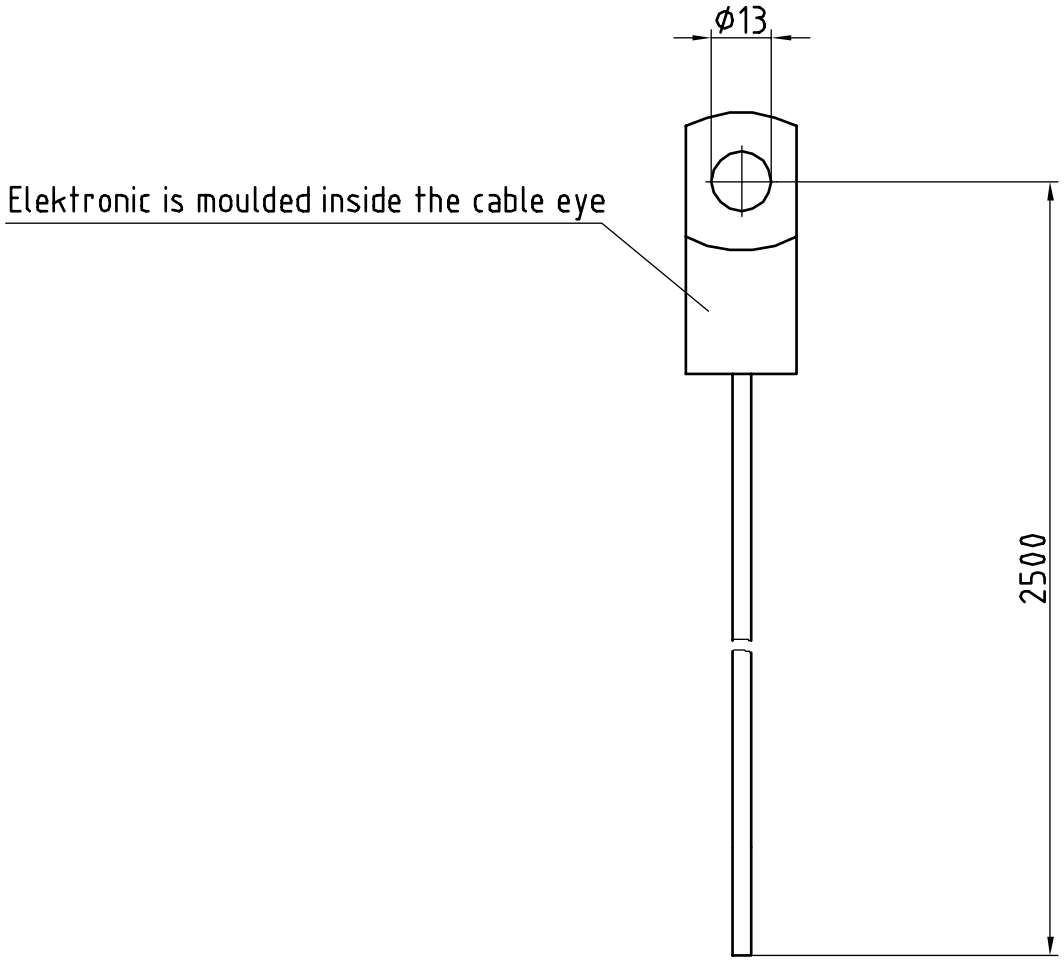

All dimensions in mm

ESD-Resistor with cable	FMC EnergySystems – FMC Measurement Solutions	F.A. Sening GmbH – Ellerbek, Germany		
	4	Gewicht : kg	Datum : 12.11.2001	Name : Benthack
Bestell-Nr. ASS-GW-ESU	Geänd. am :	Zeichnungs-Nr. E51.350229		Rev.

DOK-415E
"Schutzvermerk nach DIN 34 beachten"

DOK-415E; DOK-416E

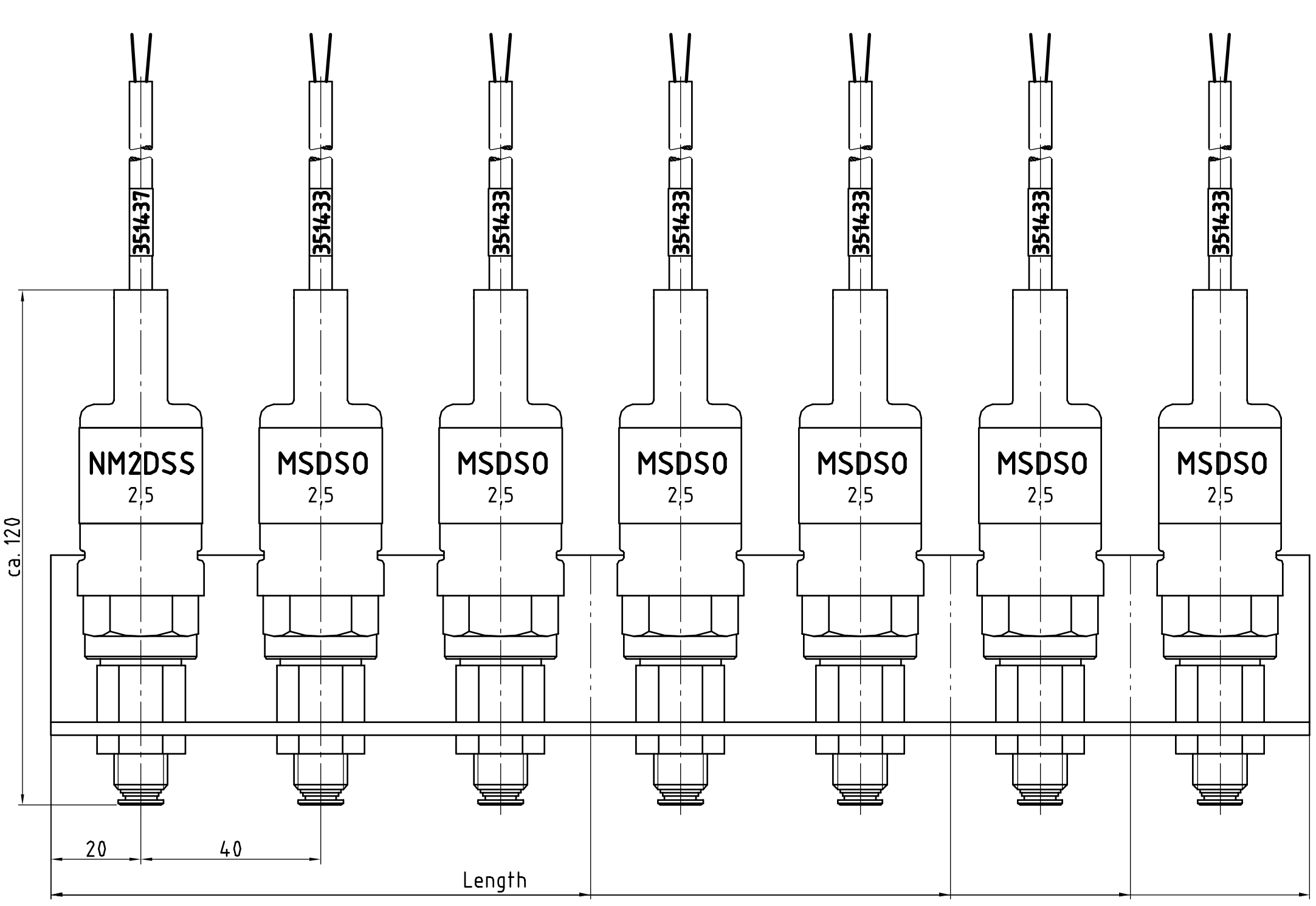

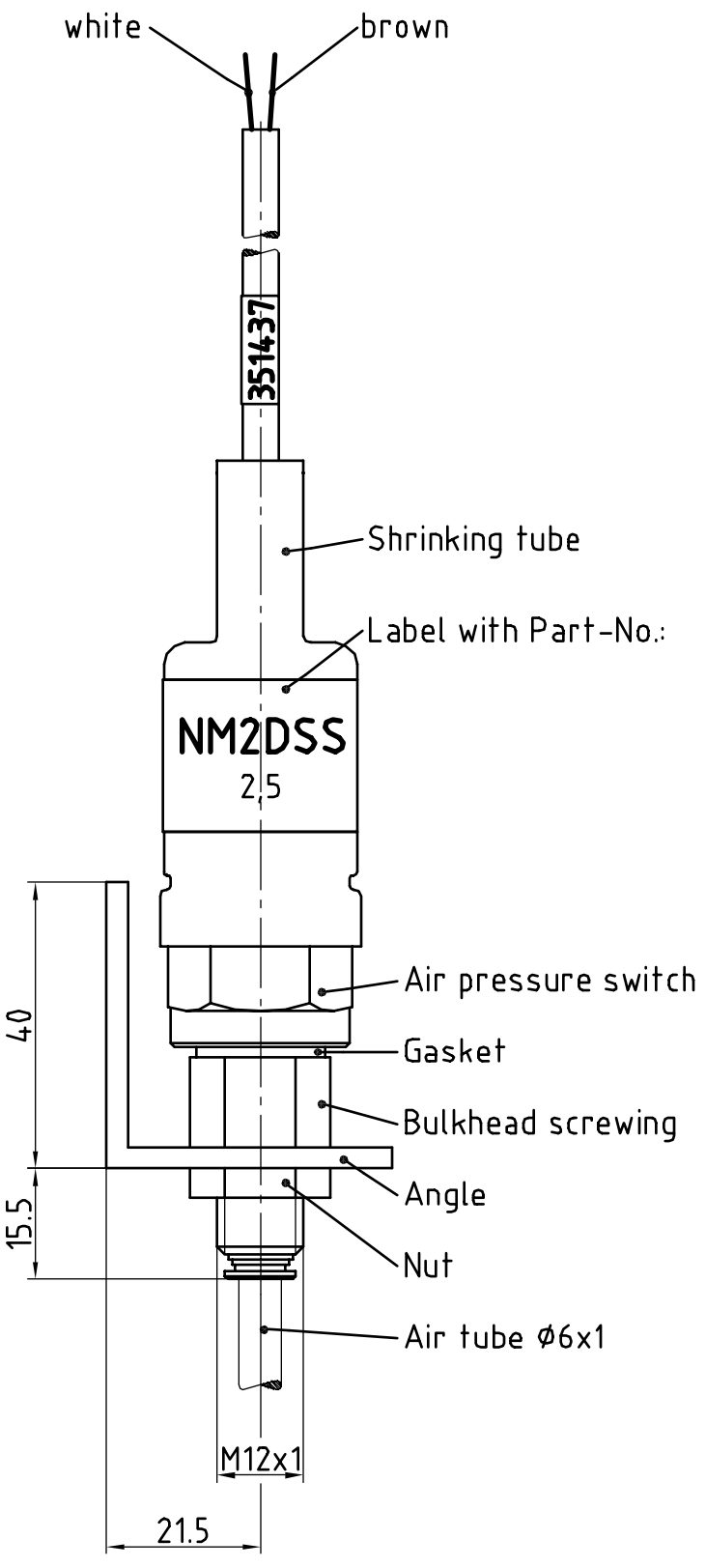

Part-No.	Master switch	Compartment switch	Length of angle
MSDSO-2M	1x	2x	120
MSDSO-4M	1x	4x	200
MSDSO-5M	1x	5x	240
MSDSO-6M	1x	6x	280

"Schutzvermerk nach DIN 34 beachten"

All dimensions in mm

Small rail with air pressure switch

Bestell-Nr. MSDSO-...M

FMC EnergySystems
FMC Measurement Solutions

F.A. Sening GmbH
D-25474 Ellerbek, Germany

3	Gewicht : kg	Datum : 19.11.2001	Name : Benthack

Geänd. am : 31.01.02 NB;	Zeichnungs-Nr. E61.351480	Rev. A

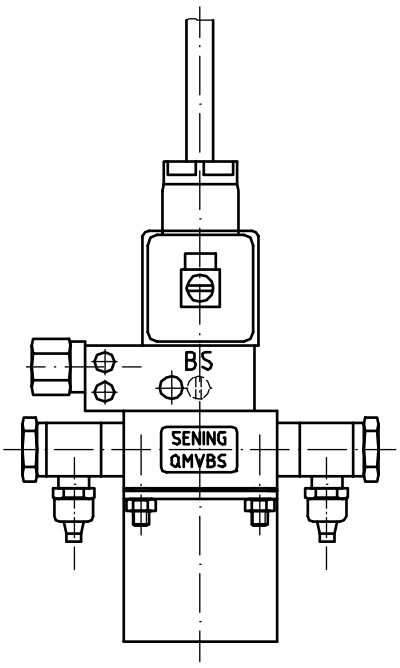

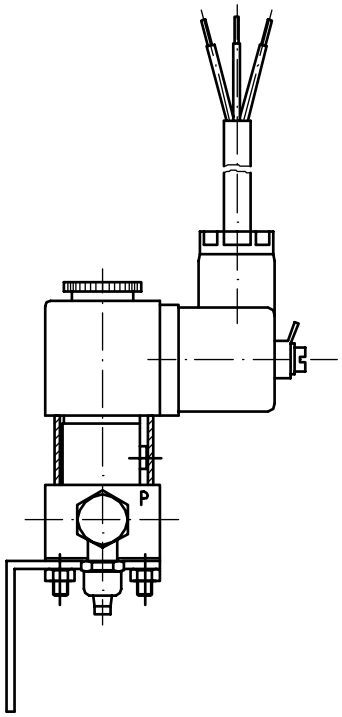

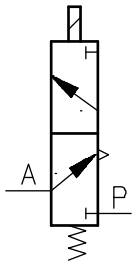

Schematic

DOK-415E
"Schutzvermerk nach DIN 34 beachten"

Solenoid valve BS,complete/QSS	FMC EnergySystems (FMC Measurement Solutions) F.A. Sening GmbH Ellerbek, Germany			
	3	Gewicht : kg	Datum : 20.11.2001	Name : Benthack
Bestell-Nr. QMVBS	Geänd. am :	Zeichnungs-Nr. E51.24070		Rev.

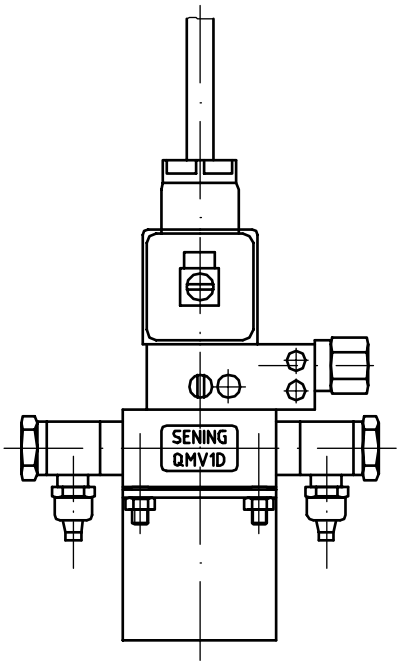

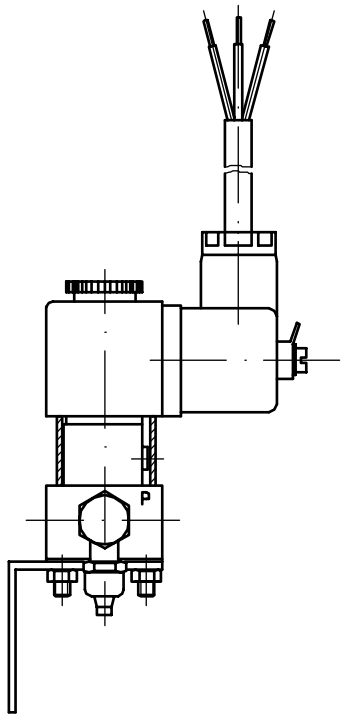

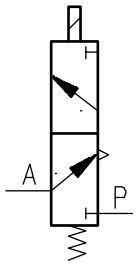

Schematic

DOK-415E
"Schutzvermerk nach DIN 34 beachten"

Solenoid valve 1D,complete/QSS	FMC EnergySystems (FMC Measurement Solutions) F.A. Sening GmbH (Ellerbek, Germany)			
	3	Gewicht : kg	Datum : 20.11.2001	Name : Benthack
Bestell-Nr. QMV1D	Geänd. am :	Zeichnungs-Nr. E51.24090		Rev.

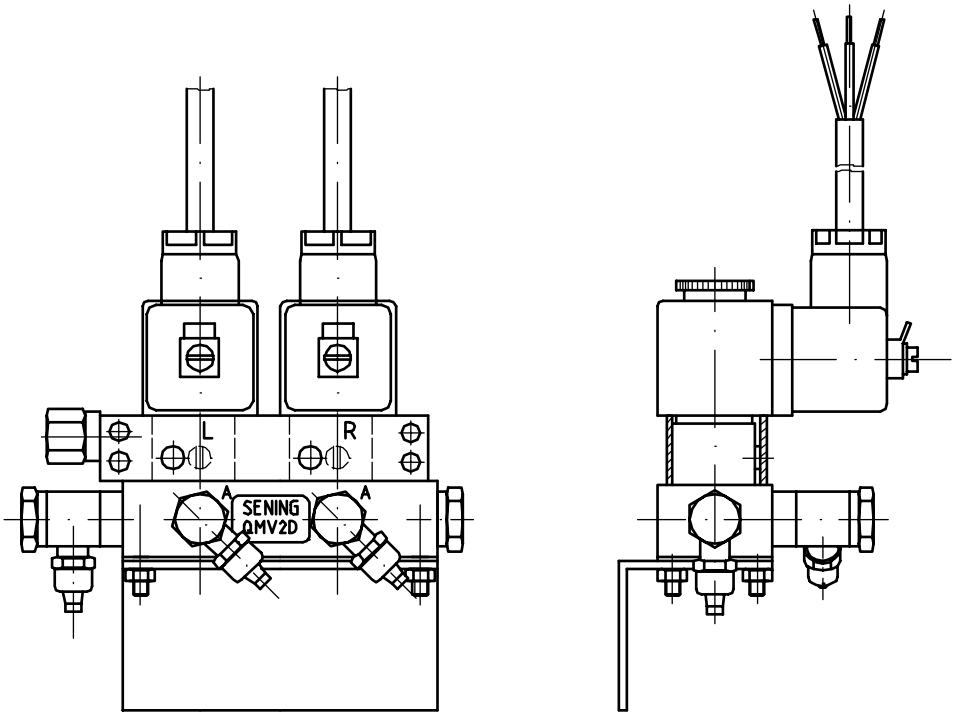

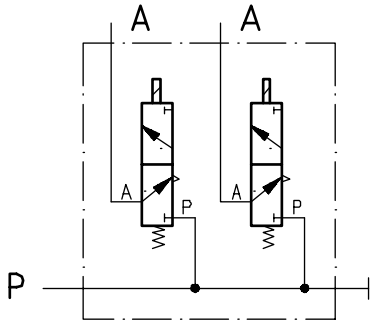

Schematics

Solenoid valve 2D, complete

FMC EnergySystems
FMC Measurement Solutions

F.A. Sening GmbH
Ellerbek, Germany

3	Gewicht : kg	Datum : 03.12.2001	Name : Benthack

Bestell-Nr. QMV2D	Geänd. am :	Zeichnungs-Nr. E51.24169	Rev.

DOK-415E

"Schutzvermerk nach DIN 34 beachten"

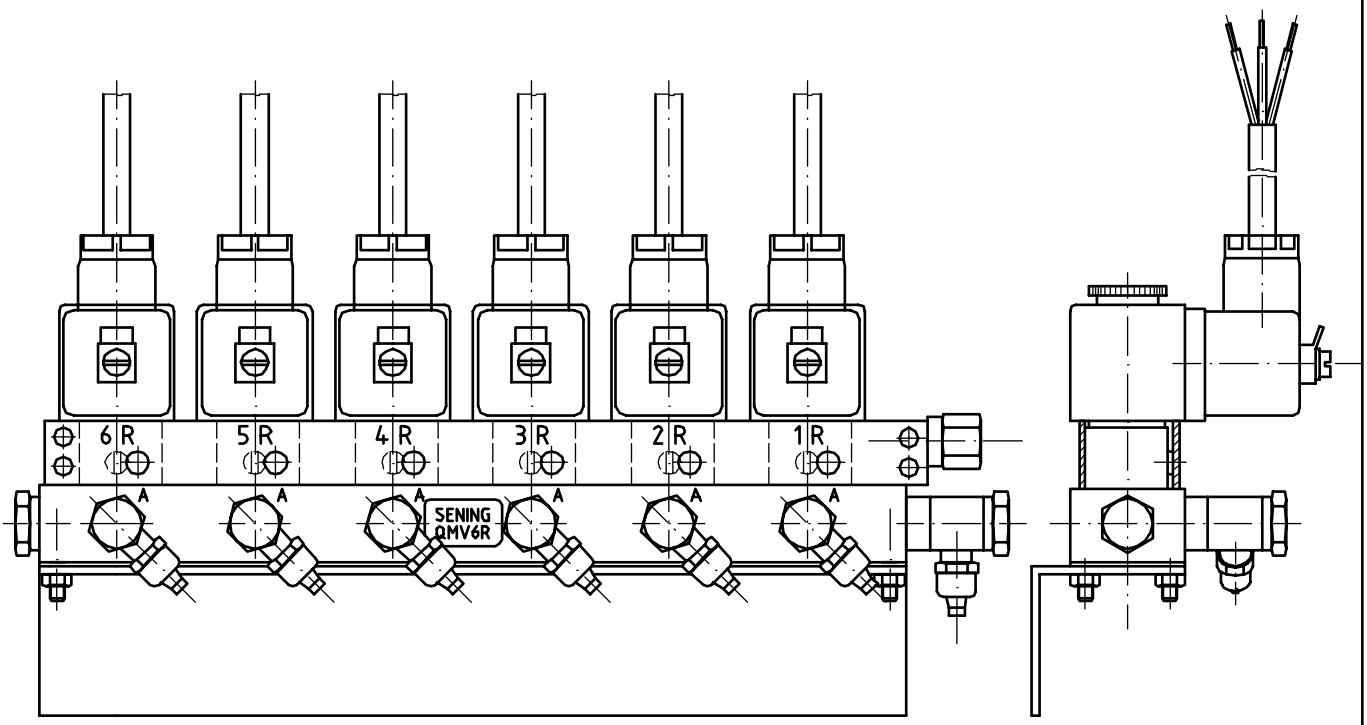

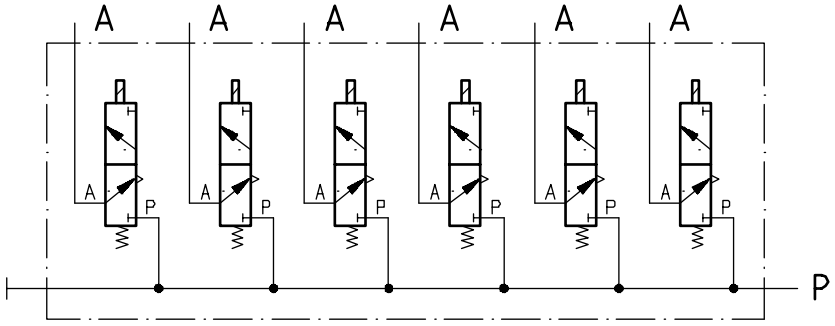

Schematics

Solenoid valve 6R, complete

FMC EnergySystems
FMC Measurement Solutions

F.A. Sening GmbH
Ellerbek, Germany

3	Gewicht : kg	Datum : 29.11.2001	Name : Benthack

Bestell-Nr. QMV6R

Geänd. am :	Zeichnungs-Nr. E51.24068	Rev.

DOK-415E
"Schutzvermerk nach DIN 34 beachten"

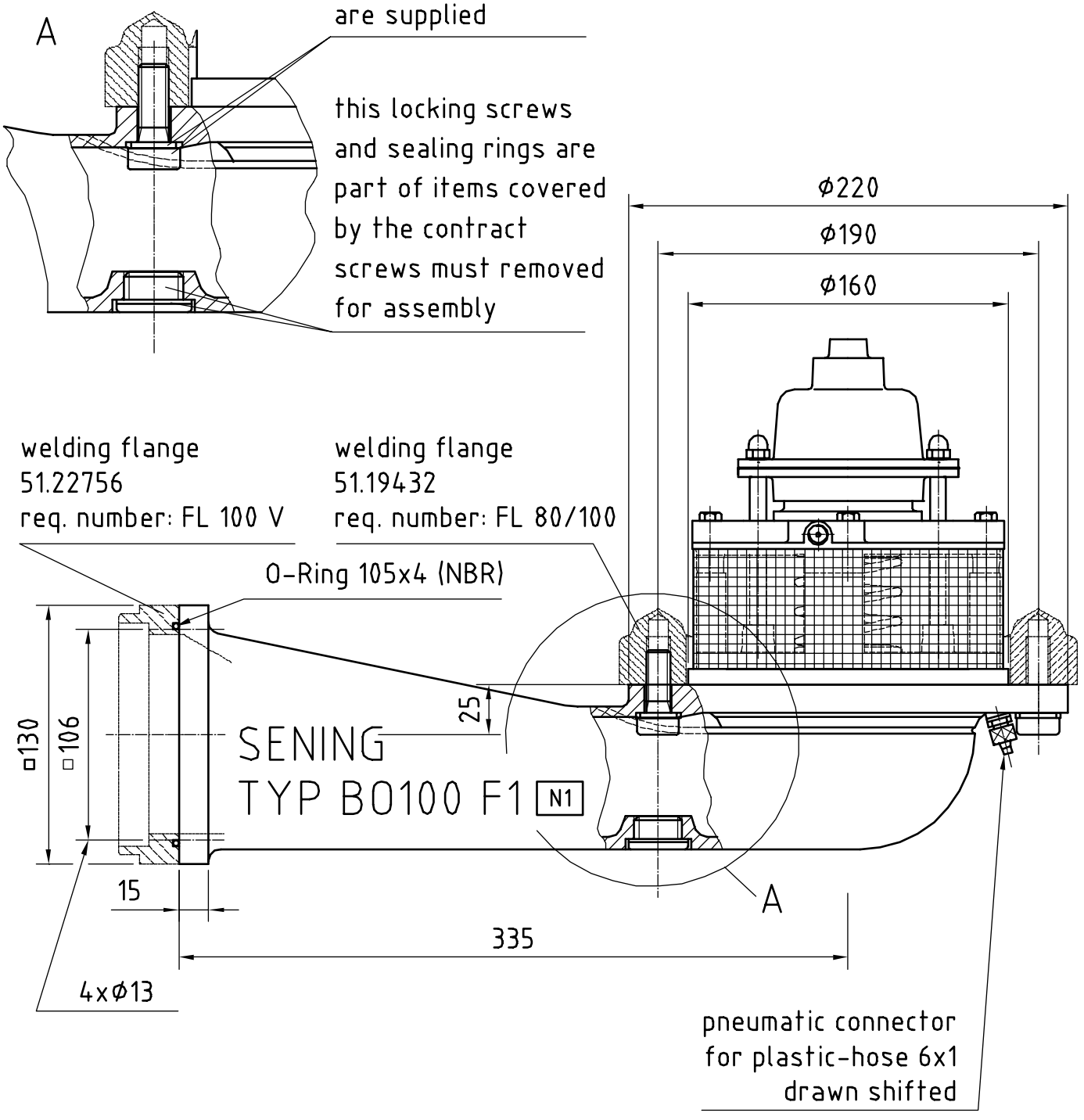

- Material of contruction:
  Aluminium body, FKM and
  NBR seals
- Weight: 6,3 kg
- Temperature range: -20°C to +60°C
- Nominal size: DN 100
- Nominal pressure: PN 10
- Service working Pressure:
  250 kPa to 750 kPa

All dimensions in mm

Pneumatic Operated Footvalve Non-Pressure Balanced (with strainer)

FMC EnergySystems
FMC Measurement Solutions

F.A. Sening GmbH
D-25474 Ellerbek, Germany

2	Gewicht: 6,3 kg	Datum: 05.06.1997	Name: Martensen

Bestell-Nr. B0100-F1-N1

Geänd. am: 16.11.01 NB;	Zeichnungs-Nr. E51.250469	Rev.

DOK-415E
"Schutzvermerk nach DIN 34 beachten"

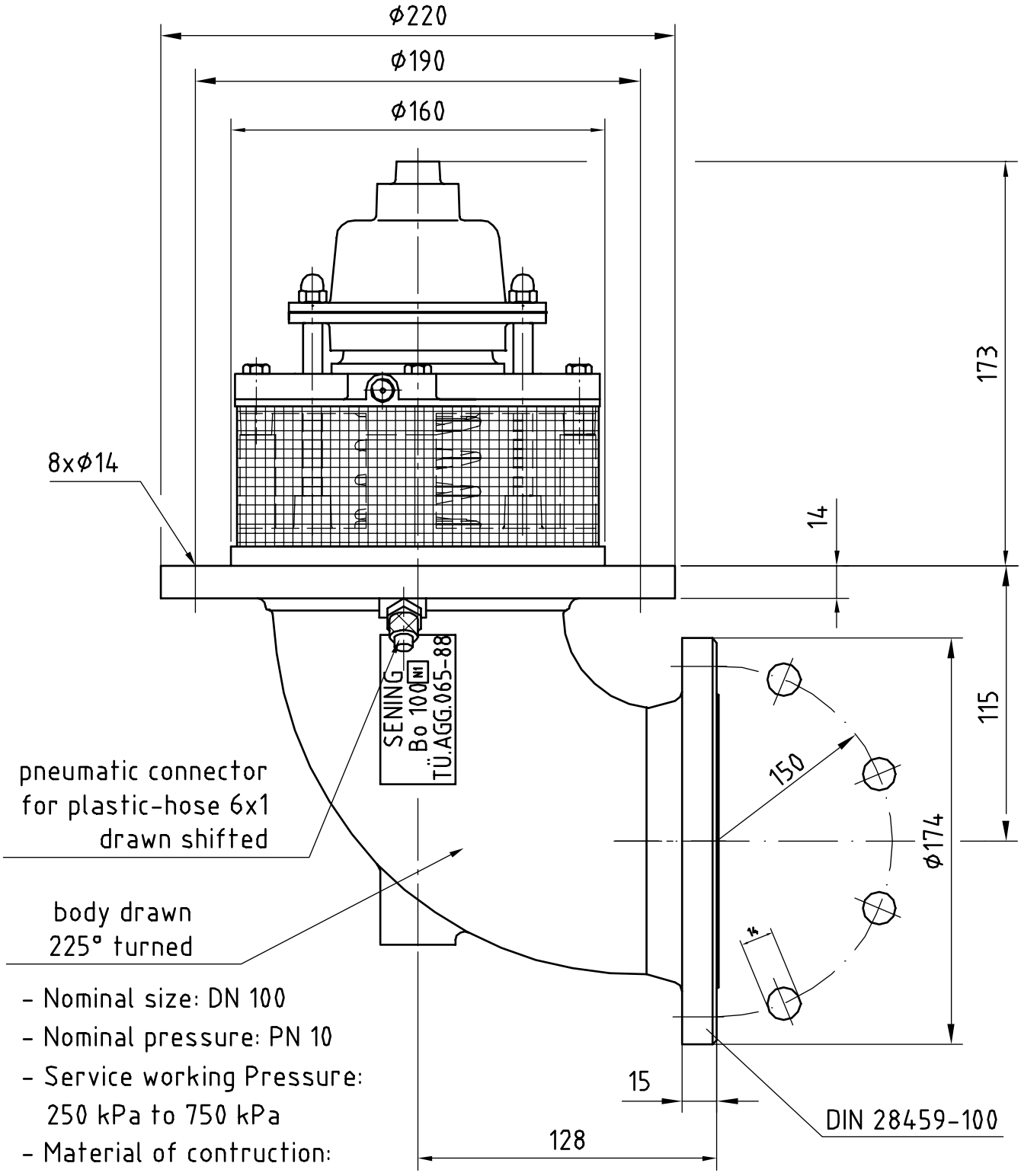

- Nominal size: DN 100
- Nominal pressure: PN 10
- Service working Pressure:
  250 kPa to 750 kPa
- Material of contruction:
  Aluminium body, FKM and
  NBR seals
- Weight: 4,6 kg
- Temperature range: -20°C to +60°C
- All dimensions in mm

Pneumatic Operated Footvalve Non-Pressure Balanced (with strainer)

FMC EnergySystems
FMC Measurement Solutions

F.A. Sening GmbH
D-25474 Ellerbek, Germany

2	Gewicht: 4,6 kg	Datum: 15.04.1997	Name: Martensen

Bestell-Nr. B0100-N1

Geänd. am: 19.11.01 NB;	Zeichnungs-Nr. E51.250466	Rev.

DOK-415E
"Schutzvermerk nach DIN 34 beachten"

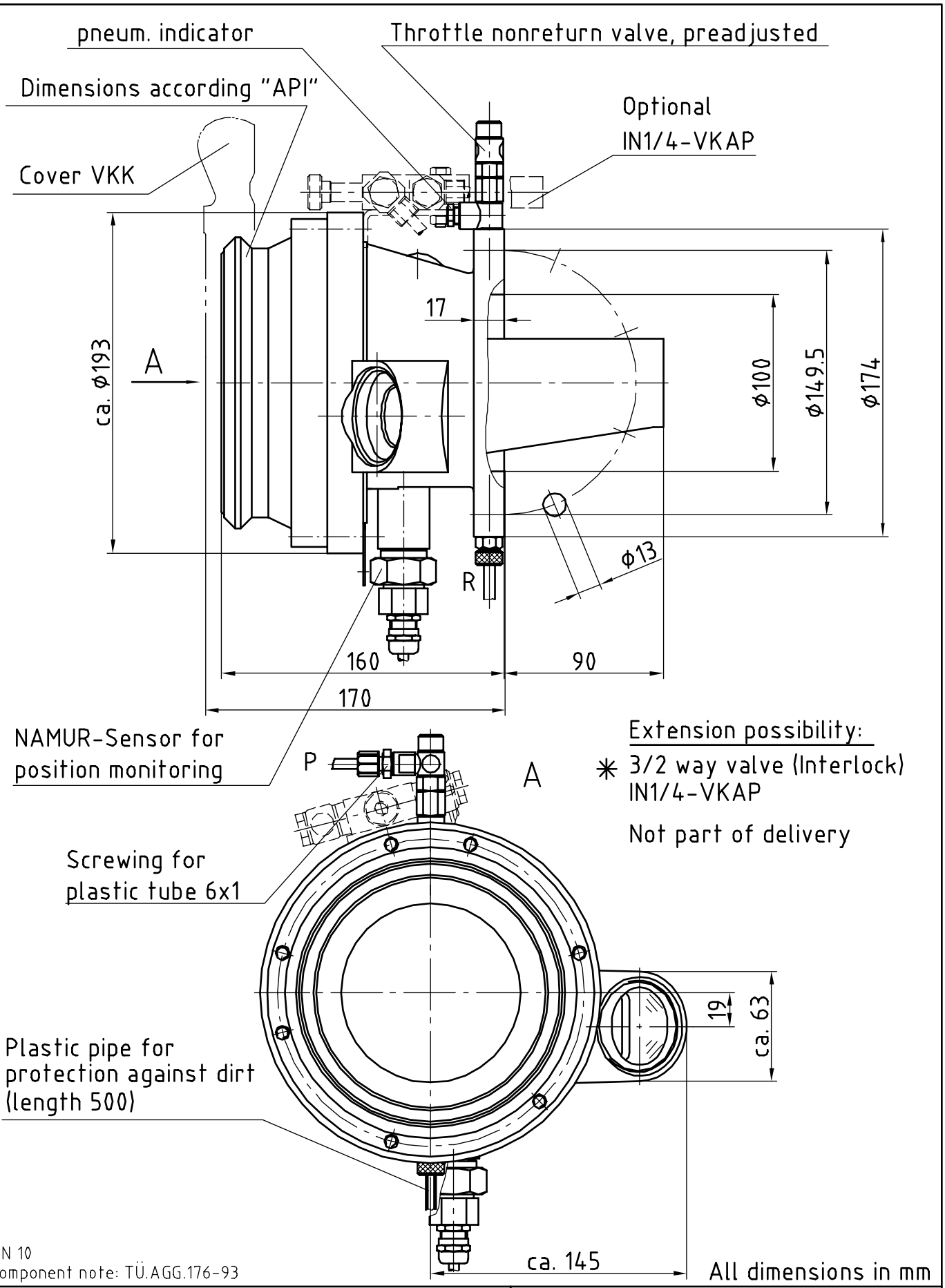

PN 10
component note: TÜ.AGG.176-93

All dimensions in mm

Pneum. API-Coupling with position monitoring

FMC EnergySystems
FMC Measurement Solutions

F.A. Sening GmbH
Ellerbek, Germany

1	Gewicht : 5,4 kg	Datum : 20.11.2001	Name : Benthack

Bestell-Nr. VKAP100-I2

Geänd. am :	Zeichnungs-Nr. E51.250970	Rev.

DOK-415E
"Schutzvermerk nach DIN 34 beachten"

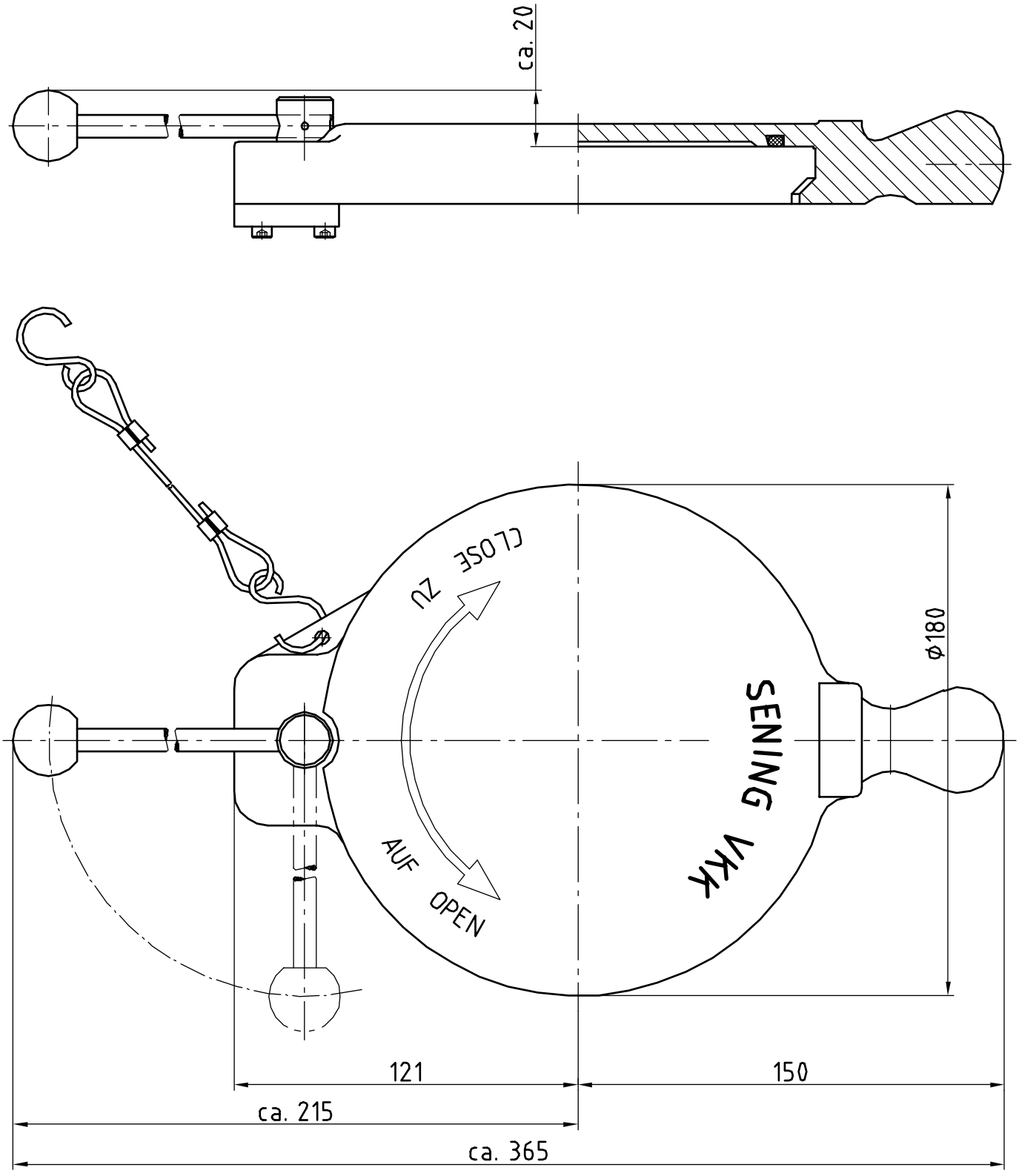

All dimensions in mm

Verschlußkappe VKK
closing cap VKK

FMC EnergySystems
FMC Measurement Solutions

F.A. Sening GmbH
Ellerbek, Germany

3	Gewicht : kg	Datum : 25.04.1988	Name : Schmidt

Bestell–Nr. VKK

Geänd. am : 06.09.88 ; 25.10.88 ; 09.02.89 ; 09.06.94 ; 08.11.00 Hm; 04.07.01 Drw; 19.11.01 NB; 20.11.02 NB;

Zeichnungs–Nr. 51.22377

Rev. B

DOK-415E
"Schutzvermerk nach DIN 34 beachten"

DOK-415E

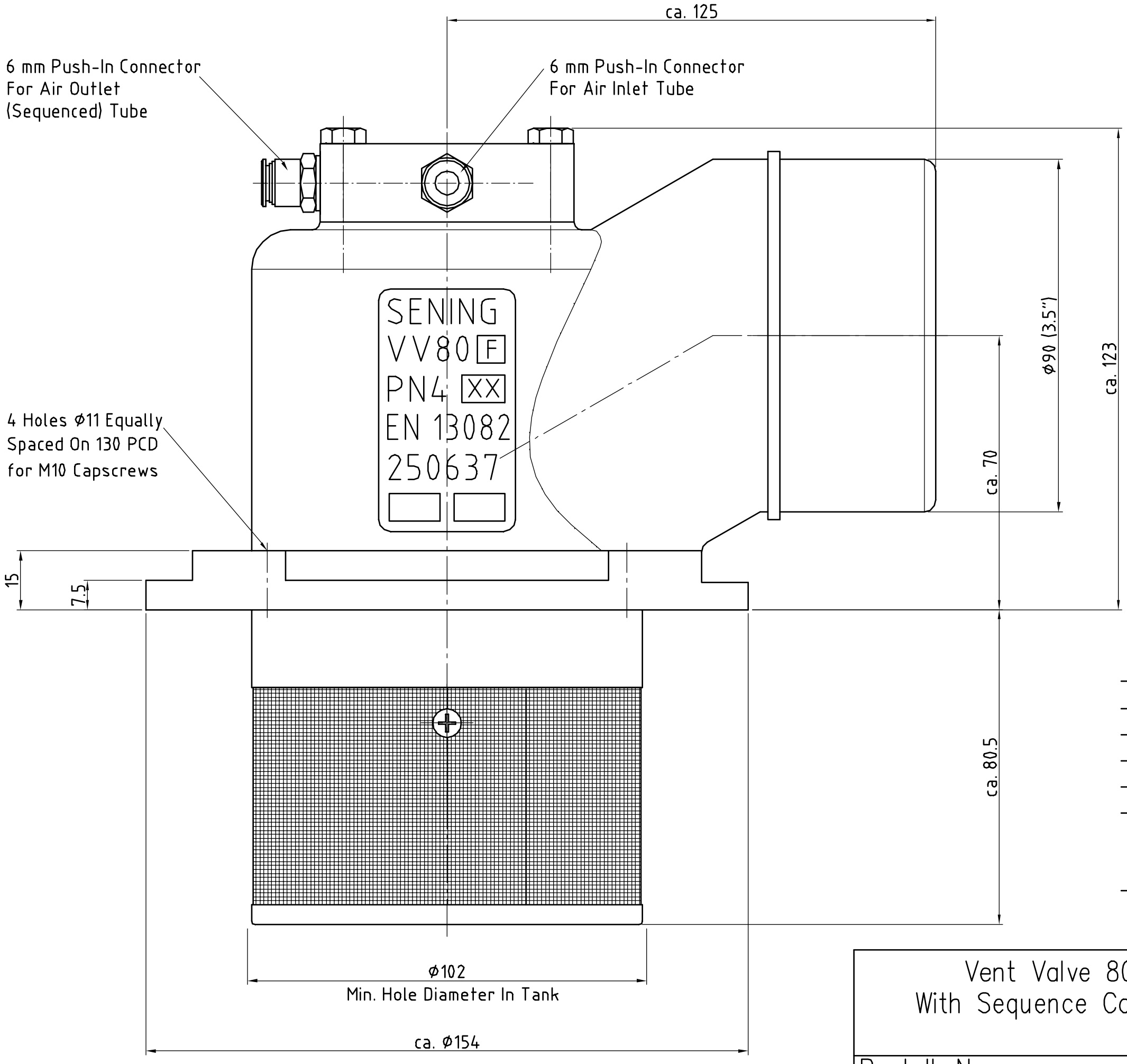

- Nominal Size: DN 80
- Nominal pressure: PN 4
- Max. Air Pressure: 8 bar
- Min. Air Pressure: 3 bar
- Operation Temperature: -30 °C to +60 °C
- Material Of Construction:
  Aluminium Body, FKM And NBR Seals,
  POM, Stainless Steel
- All dimensions in mm

Pressure Drop Curve see drawing 51.250811

"Schutzvermerk nach DIN 34 beachten"

Vent Valve 80
With Sequence Control

F.A. Sening GmbH
An FMC Corporation subsidiary

	Gewicht :	Datum :	Name :
2	2,5 kg	17.06.1998	Martensen

Bestell-Nr. VV80-F

Geänd. am : 09.07.99 Ste; 06.12.00 Drw; 19.11.01 NB;

Zeichnungs-Nr. E61.250644

Rev. D

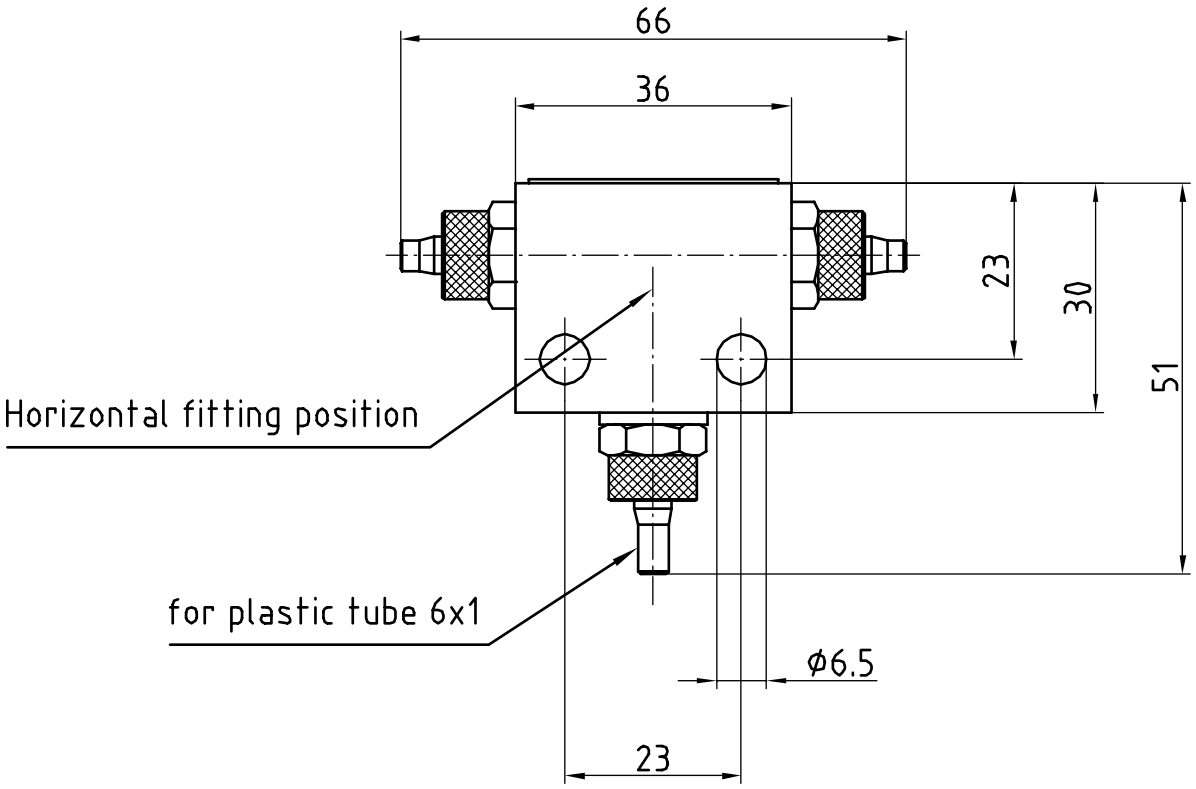

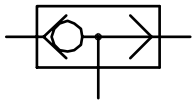

Schematic

All dimensions in mm

Pneum. two way valve PWV	FMC EnergySystems – FMC Measurement Solutions	F.A. Sening GmbH – Ellerbek, Germany		
	4	Gewicht : kg	Datum : 19.11.2001	Name : Benthack
Bestell-Nr. PWV	Geänd. am :	Zeichnungs-Nr. E51.22570		Rev.

DOK-415E

"Schutzvermerk nach DIN 34 beachten"

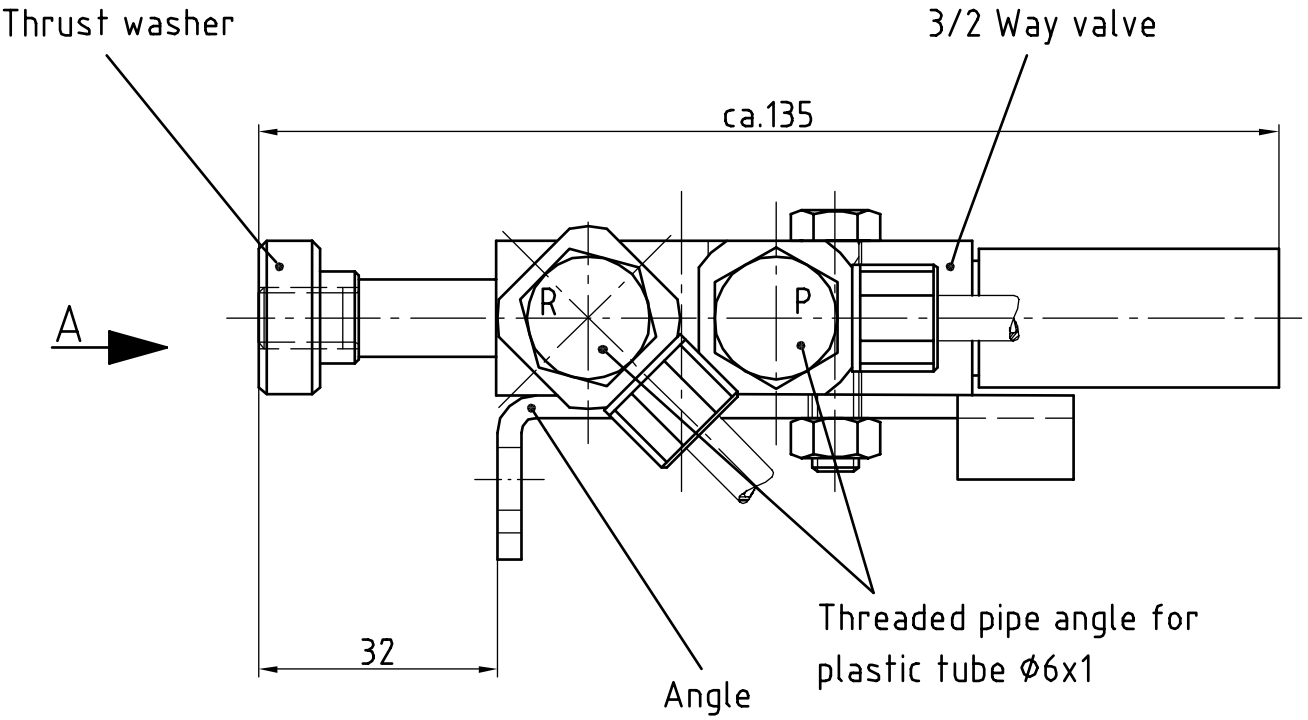

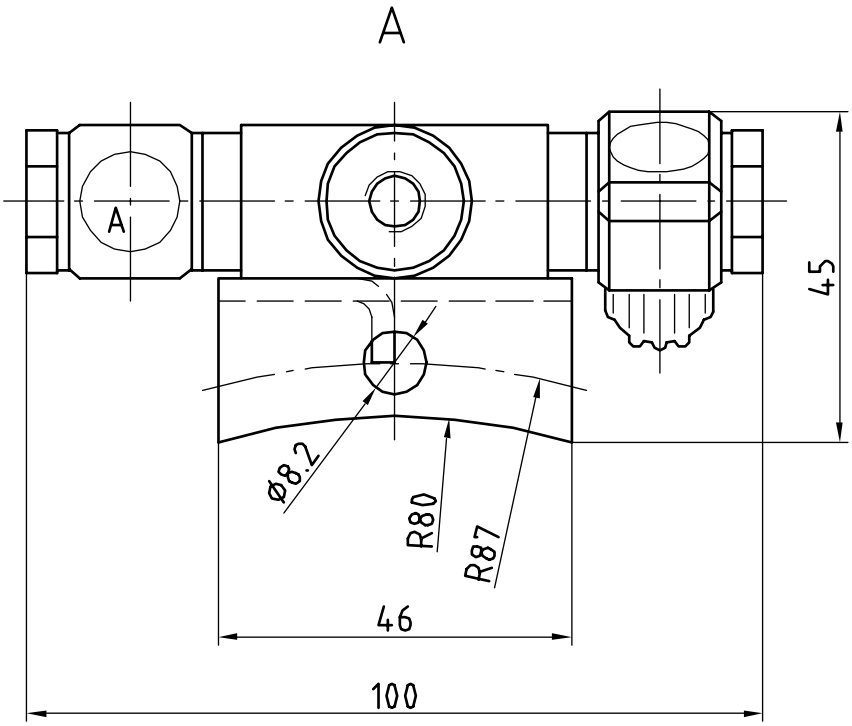

All dimensions in mm

Interlock for VKAP-100

FMC EnergySystems
FMC Measurement Solutions

F.A. Sening GmbH
Ellerbek, Germany

4	Gewicht : kg	Datum : 19.11.2001	Name : Benthack

Bestell-Nr. IN1/4-VKAP

Geänd. am :	Zeichnungs-Nr. E51.250608	Rev.

DOK-415E
"Schutzvermerk nach DIN 34 beachten"

Brakes

Guard Bar Locks

Compartment Vent Valve

Coaming Valve

Vapour Recovery Valve

Scully

Foot Valve

MSDSO

Pneumatic API

STBr

D1

D2

D3

D4

D5

D6

D7

D8

D9

MV1

MV2

MV3

MV4

MV5

MV6

MV7 BS

MV8 AG

Master Switch

Visual Indicator

Main Air Pressure Switch NM2DSS

Emergency Button

Vehicle Air Supply

Air Service Unit

"Schutzvermerk nach DIN 34 beachten"

Pneumatic Circuit Diagram

NoMix 2000 & SPD

Vapour Recovery / Pneumatic API

FMC **F.A. Sening GmbH**
An FMC Corporation subsidiary

Geänd. am :	Datum : 26.11.2001	Name : Arndt
	Zeichnungs-Nr. E61.251317	Rev.

Translation

(1) # EC-TYPE EXAMINATION CERTIFICATE

(2) Equipment or Protective System intended for use in potentially explosive atmospheres - **Directive 94/9/EC**

(3) EC-Type Examination Certificate Number

TÜV 00 ATEX 1599

(4)	Equipment or Protective System:	Main Unit type NM2-Main.-...
(5)	Manufacturer:	F.A. Sening GmbH
(6)	Address:	Regentstraße 1 D-25474 Ellerbek

(7) This equipment or protective system and any acceptable variation thereto is specified in the schedule to this certificate and the documents therein referred to.

(8) The TÜV Hannover/Sachsen-Anhalt e.V., TÜV Certification Body N° 0032 in accordance with Article 9 of the Council Directive 94/9/EC of March 23, 1994, certifies that this equipment or protective system has been found to comply with the Essential Health and Safety Requirements relating to the design and construction of equipment and protective systems intended for use in potentially explosive atmospheres given in Annex II to the Directive.

The examination and test results are recorded in confidential report N° 00 PX 12500.

(9) Compliance with the Essential Health and Safety Requirements has been assured by compliance with:

EN 50 014:1997 **EN 50 019:1994** **EN 50 020:1994** **EN 50 028:1987**

(10) If the sign "X" is placed after the certification number, it indicates that the equipment or protective system is subject to special conditions for safe use specified in the schedule to this certificate.

(11) This EC-TYPE EXAMINATION CERTIFICATE relates only to the design and construction of the specified equipment or protective system. If applicable, further requirements of this Directive apply to the manufacture and supply of this equipment or protective system.

(12) The marking of the equipment or protective system shall include the following:

Ex II 2 G EEx e ia m IIB T4

TÜV Hannover/Sachsen-Anhalt e.V.
TÜV CERT-Zertifizierungsstelle
Am TÜV 1
D-30519 Hannover

Head of the Certification Body

Hannover, 2000-08-18

AP/CERTNORD 10.98

This certificate may only be reproduced without any change, schedule included.
Excerpts or changes shall be allowed by the TÜV Hannover/Sachsen-Anhalt e.V.

(13) **SCHEDULE**

(14) **EC-TYPE EXAMINATION CERTIFICATE N° TÜV 00 ATEX 1599**

(15) Description of equipment or protective system

The Main Unit type NM2-Main.-... is the central electronic controller of the NoMix 2000 system which provides control and monitoring functions on tank trucks transporting mineral oil products.
The device meets the requirements of category 2 and may be used in potentially explosive areas of zone 1 resp. 2.
The non intrinsically safe components and assemblies are in the type of protection encapsulation "m" and the terminal box is in the type of protection increased safety "e". The internal intrinsically safe supply EEx ia is realized by an associated apparatus in the encapsulation.

The permissible ambient temperature range is –20°C to 60°C.

Electrical data

Supply circuit, external..... (terminal 1 and 2)	Nominal voltage 24 V d.c., 15 V to 30 V d.c. P ≤ 30 W from internal installed battery of the associated tank truck
CAN bus circuit, internal..... (terminal 4 and 5)	U ≤ 24 V I ≤ 1 A
CAN bus circuit, external..... (terminal 8 and 9)	U ≤ 24 V I ≤ 1 A
Printer circuit ..... (terminal 11 and 12)	U ≤ 24 V I ≤ 1 A

The non intrinsically safe input circuits are safely galvanically separated from the internal intrinsically safe circuit up to a peak crest value of the nominal voltage of 60 V.

(16) Test documents are listed in the test report N° 00 PX 12500.

(17) Special condition for safe use

none

(18) Essential Health and Safety Requirements

no additional ones

Translation

1. SUPPLEMENT to

EC TYPE-EXAMINATION CERTIFICATE No. TÜV 00 ATEX 1599

of the company: F.A. Sening GmbH
Regentstraße 1
D-25474 Ellerbek

In the future, the Main Unit type NM2-Main.-... may also be manufactured according to the test documents listed in the test report.

The electrical data and all other details apply unchanged for this supplement.

(16) Test documents are listed in the test report N° 00 PX 12501.

(17) Further special conditions for safe use

none

(18) Essential Health and Safety Requirements

no additional ones

TÜV Hannover/Sachsen-Anhalt e.V.
TÜV CERT-Zertifizierungsstelle
Am TÜV 1
D-30519 Hannover

Hanover, 2000-10-26

i. V.

Head of the
Certification Body

Translation

(1) # EC-TYPE EXAMINATION CERTIFICATE

(2) Equipment or Protective System intended for use in potentially explosive atmospheres - **Directive 94/9/EC**

(3) EC-Type Examination Certificate Number

TÜV 00 ATEX 1601

(4)	Equipment or Protective System:	Display Interface type NM2-Display.-...
(5)	Manufacturer:	F.A. Sening GmbH
(6)	Address:	Regentstraße 1 D-25474 Ellerbek

(7) This equipment or protective system and any acceptable variation thereto is specified in the schedule to this certificate and the documents therein referred to.

(8) The TÜV Hannover/Sachsen-Anhalt e.V., TÜV Certification Body N° 0032 in accordance with Article 9 of the Council Directive 94/9/EC of March 23, 1994, certifies that this equipment or protective system has been found to comply with the Essential Health and Safety Requirements relating to the design and construction of equipment and protective systems intended for use in potentially explosive atmospheres given in Annex II to the Directive.

The examination and test results are recorded in confidential report N° 00 PX 12600.

(9) Compliance with the Essential Health and Safety Requirements has been assured by compliance with:

EN 50 014:1997 **EN 50 019:1994** **EN 50 020:1994** **EN 50 028:1987**

(10) If the sign "X" is placed after the certification number, it indicates that the equipment or protective system is subject to special conditions for safe use specified in the schedule to this certificate.

(11) This EC-TYPE EXAMINATION CERTIFICATE relates only to the design and construction of the specified equipment or protective system. If applicable, further requirements of this Directive apply to the manufacture and supply of this equipment or protective system.

(12) The marking of the equipment or protective system shall include the following:

Ex II 2 G EEx e ia m IIB T4

TÜV Hannover/Sachsen-Anhalt e.V.
TÜV CERT-Zertifizierungsstelle
Am TÜV 1
D-30519 Hannover

Head of the Certification Body

Hannover, 2000-08-18

AP/CERTNORD 10.98

This certificate may only be reproduced without any change, schedule included.
Excerpts or changes shall be allowed by the TÜV Hannover/Sachsen-Anhalt e.V.

(13) **SCHEDULE**

(14) **EC-TYPE EXAMINATION CERTIFICATE N° TÜV 00 ATEX 1601**

(15) Description of equipment or protective system

The Display Interface type NM2-Display.-... is the indicating and operating device of the NoMix 2000 system.
The device meets the requirements of category 2 and may be used in potentially explosive areas of zone 1 resp. 2.
The non intrinsically safe components and assemblies are in the type of protection encapsulation "m" and the terminal box is in the type of protection increased safety "e". The internal intrinsically safe supply EEx ia is realized by an associated apparatus in the encapsulation.

The permissible ambient temperature range is –20°C to 60°C.

Electrical data

Supply circuit, external.....	Nominal voltage 24 V d.c., 15 V to 30 V d.c.
(terminal 1 and 2)	P ≤ 30 W
	from internal installed battery of the associated tank truck
CAN bus circuit, internal.....	U ≤ 24 V
(terminal 4 and 5)	I ≤ 1 A

The non intrinsically safe input circuits are safely galvanically separated from the internal intrinsically safe circuits up to a peak crest value of the nominal voltage of 60 V.

(16) Test documents are listed in the test report N° 00 PX 12600.

(17) Special condition for safe use

none

(18) Essential Health and Safety Requirements

no additional ones

Translation

1. SUPPLEMENT to

EC TYPE-EXAMINATION CERTIFICATE No. TÜV 00 ATEX 1601

of the company: F.A. Sening GmbH
Regentstraße 1
D-25474 Ellerbek

In the future, the Display Interface type NM2-Display.-... may also be manufactured according to the test documents listed in the test report.

The amendments concern the internal design.

The electrical data and all other details apply unchanged for this supplement.

Test documents are listed in the test report N° 02 YEX 175480b.

TÜV NORD CERT GmbH & Co. KG
TÜV CERT-Certification Body
Am TÜV 1
D-30519 Hannover
Tel.: 0511 986-1470
Fax: 0511 986-2555

Hannover, 2002-05-29

Head of the
Certification Body

Translation

(1) # EC-TYPE EXAMINATION CERTIFICATE

(2) Equipment or protective system intended for use in potentially explosive atmospheres **- Directive 94/9/EC**

(3) EC-Type Examination Certificate Number

TÜV 03 ATEX 2022

(4) Equipment: Main Unit type NM2-Main/Disp.-...

(5) Manufacturer: F.A. Sening GmbH

(6) Address: Regentstraße 1
D-25474 Ellerbek

(7) This equipment or protective system and any acceptable variation thereto are specified in the schedule to this certificate and the documents therein referred to.

(8) The TÜV NORD CERT GmbH & Co. KG, TÜV CERT-Certification Body, notified body number N° 0032 in accordance with Article 9 of the Council Directive of the EC of March 23, 1994 (94/9/EC), certifies that this equipment or protective system has been found to comply with the Essential Health and Safety Requirements relating to the design and construction of equipment and protective systems intended for use in potentially explosive atmospheres given in Annex II to the Directive.

The examination and test results are recorded in the confidential report N° 03 YEX 550270.

(9) Compliance with the Essential Health and Safety Requirements has been assured by compliance with:

EN 50014:1997 **EN 50019:2000** **EN 50020:1994** **EN 50028:1987**

(10) If the sign "X" is placed after the certificate number, it indicates that the equipment or protective system is subject to special conditions for safe use specified in the schedule to this certificate.

(11) This EC-type examination certificate relates only to the design, examination and tests of the specified equipment in accordance to the Directive 94/9/EC. Further requirements of the Directive apply to the manufacturing process and supply of this equipment. These are not covered by this certificate.

(12) The marking of the equipment or protective system must include the following:

II 2 G EEx m ia e IIB T4

TÜV NORD CERT GmbH & Co. KG
TÜV CERT-Certification Body
Am TÜV 1
D-30519 Hannover
Tel.: 0511 986-1470
Fax: 0511 986-2555

Hanover, 2003-01-27

TÜV NORD CERT

Head of the
Certification Body

This certificate may only be reproduced without any change, schedule included.
Excerpts or changes shall be allowed by the TÜV NORD CERT GmbH & Co. KG

(13) **SCHEDULE**

(14) EC-TYPE EXAMINATION CERTIFICATE N° TÜV 03 ATEX 2022

(15) Description of equipment

The Main Unit NM2-Main/Disp.-... is the central control-, display- and operator device of the NoMix 2000 system, which carries out control and monitoring functions on tank trucks transporting mineral oil products.

Non-intrinsically safe components and assemblies are realized in the type of protection encapsulation "m" and the terminal box is in the type of protection increased safety "e". The internal intrinsically safe supply EEx "ia" is realized by an associated apparatus inside of the encapsulation.

. The permissible ambient temperature range is –20°C to 60°C.

Electrical Data

Supply..... ..... (terminals 1 and 2)	Nominal voltage 24 V d.c., 15 V to 30 V d.c. P ≤ 30 W from internal installed battery of the associated tank truck
CAN bus circuit, external ..... (terminals 3 and 7)	U ≤ 24 V I ≤ 1 A
CAN bus circuit, internal ..... (terminals 3 and 6)	U ≤ 24 V I ≤ 1 A
Printer circuit ..... (terminals 2, 5 and 8)	U ≤ 24 V I ≤ 1 A

The non-intrinsically safe input circuits are safely galvanically separated from the internal intrinsically safe circuit up to a peak crest value of the nominal voltage of 60 V.

(16) Test documents are listed in the test report No.: 03 YEX 550270.

(17) Special conditions for safe use

none

(18) Essential Health and Safety Requirements

no additional ones

Translation

(1) # EC-TYPE EXAMINATION CERTIFICATE

(2) Equipment or Protective System intended for use in potentially explosive atmospheres - **Directive 94/9/EC**

(3) EC-Type Examination Certificate Number

TÜV 00 ATEX 1603

(4)	Equipment or Protective System:	Level Sensor Interface type NM2-Wet.-...
(5)	Manufacturer:	F.A. Sening GmbH
(6)	Address:	Regentstraße 1 D-25474 Ellerbek

(7) This equipment or protective system and any acceptable variation thereto is specified in the schedule to this certificate and the documents therein referred to.

(8) The TÜV Hannover/Sachsen-Anhalt e.V., TÜV Certification Body N° 0032 in accordance with Article 9 of the Council Directive 94/9/EC of March 23, 1994, certifies that this equipment or protective system has been found to comply with the Essential Health and Safety Requirements relating to the design and construction of equipment and protective systems intended for use in potentially explosive atmospheres given in Annex II to the Directive.

The examination and test results are recorded in confidential report N° 00 PX 12700.

(9) Compliance with the Essential Health and Safety Requirements has been assured by compliance with:

EN 50 014:1997 **EN 50 019:1994** **EN 50 020:1994** **EN 50 028:1987**

(10) If the sign "X" is placed after the certification number, it indicates that the equipment or protective system is subject to special conditions for safe use specified in the schedule to this certificate.

(11) This EC-TYPE EXAMINATION CERTIFICATE relates only to the design and construction of the specified equipment or protective system. If applicable, further requirements of this Directive apply to the manufacture and supply of this equipment or protective system.

(12) The marking of the equipment or protective system shall include the following:

Ex II 2 G EEx e ia [ia] m IIB T4

TÜV Hannover/Sachsen-Anhalt e.V.
TÜV CERT-Zertifizierungsstelle
Am TÜV 1
D-30519 Hannover

Hannover, 2000-08-18

Head of the Certification Body

This certificate may only be reproduced without any change, schedule included.
Excerpts or changes shall be allowed by the TÜV Hannover/Sachsen-Anhalt e.V.

(13) **SCHEDULE**

(14) **EC-TYPE EXAMINATION CERTIFICATE N° TÜV 00 ATEX 1603**

(15) Description of equipment or protective system

The Level Sensor Interface type NM2-Wet.-... is part of the NoMix 2000 system and is used for the identification of product quantities remaining in the chambers of the tank truck.
The device meets the requirements of category 2 and may be used in potentially explosive areas of zone 1 resp. 2.
The non intrinsically safe compounds and assemblies are in the type of protection encapsulation "m" and the terminal box is in the typed of protection increased safety "e". The internal intrinsically safe supply EEx ia is realized by an associated apparatus in the encapsulation.

The permissible ambient temperature range is –20°C to 60°C.

Electrical data

Supply circuit, external..... Nominal voltage 24 V d.c., 15 V to 30 V d.c.
(terminal 1 and 2) $P \leq 30$ W
from internal installed battery of the associated tank truck

CAN bus circuit, internal..... $U \leq 24$ V
(terminal 4 and 5) $I \leq 1$ A

Wetlegsensor sensor circuit..... in type of protection "Intrinsic Safety" EEx ia IIB
(terminal K2 ... K7) maximum values:
$U_o =$ 7,14 V
$I_o =$ 42 mA
$P_o =$ 75 mW
characteristic line: linear
max. permissible outer capacitance: $C_o =$ 260 µF
max. permissible outer inductance: $L_o =$ 70 mH

Input circuit ..... in type of protection "Intrinsic Safety" EEx ia IIB
(terminal K1) maximum values:
$U_o =$ 7,14 V
$I_o =$ 18 mA
$P_o =$ 32 mW
characteristic line: linear
max. permissible outer capacitance: $C_o =$ 260 µF
max. permissible outer inductance: : $L_o =$ 300 mH

The non intrinsically safe input circuits are safely galvanically separated from the intrinsically safe circuits up to a peak crest value of the nominal voltage of 60 V. The intrinsically safe circuits are galvanically connected.

(16) Test documents are listed in the test report N° 00 PX 12700.

(17) Special condition for safe use

none

(18) Essential Health and Safety Requirements

no additional ones

Translation

1. SUPPLEMENT to

EC TYPE-EXAMINATION CERTIFICATE No. TÜV 00 ATEX 1603

of the company: F.A. Sening GmbH
Regentstraße 1
D-25474 Ellerbek

In the future, the Level Sensor Interface type NM2-Wet.-... may also be manufactured according to the test documents listed in the test report.
The amendments concern the internal design.

The electrical data and all other details apply unchanged for this supplement.

(16) Test documents are listed in the test report N° 02 YEX 184250a.

(17) Special conditions for safe use

none

(18) Essential Health and Safety Requirements

no additional ones

TÜV NORD CERT GmbH & Co. KG
TÜV CERT-Certification Body
Am TÜV 1
D-30519 Hannover
Tel.: 0511 986-1470
Fax: 0511 986-2555

Hannover, 2002-09-09

Head of the
Certification Body

BA 02 03.02

Translation

(1) # EC-TYPE EXAMINATION CERTIFICATE

(2) Equipment or Protective System intended for use in potentially explosive atmospheres - **Directive 94/9/EC**

(3) EC-Type Examination Certificate Number

TÜV 00 ATEX 1602

(4)	Equipment or Protective System:	SPD Sensor Interface type NM2-SPD.-...
(5)	Manufacturer:	F.A. Sening GmbH
(6)	Address:	Regentstraße 1 D-25474 Ellerbek

(7) This equipment or protective system and any acceptable variation thereto is specified in the schedule to this certificate and the documents therein referred to.

(8) The TÜV Hannover/Sachsen-Anhalt e.V., TÜV Certification Body N° 0032 in accordance with Article 9 of the Council Directive 94/9/EC of March 23, 1994, certifies that this equipment or protective system has been found to comply with the Essential Health and Safety Requirements relating to the design and construction of equipment and protective systems intended for use in potentially explosive atmospheres given in Annex II to the Directive.

The examination and test results are recorded in confidential report N° 00 PX 12800.

(9) Compliance with the Essential Health and Safety Requirements has been assured by compliance with:

EN 50 014:1997 **EN 50 019:1994** **EN 50 020:1994** **EN 50 028:1987**

(10) If the sign "X" is placed after the certification number, it indicates that the equipment or protective system is subject to special conditions for safe use specified in the schedule to this certificate.

(11) This EC-TYPE EXAMINATION CERTIFICATE relates only to the design and construction of the specified equipment or protective system. If applicable, further requirements of this Directive apply to the manufacture and supply of this equipment or protective system.

(12) The marking of the equipment or protective system shall include the following:

Ex II 2 G EEx e ia [ia] m IIB T4

TÜV Hannover/Sachsen-Anhalt e.V.
TÜV CERT-Zertifizierungsstelle
Am TÜV 1
D-30519 Hannover

Hannover, 2000-08-18

Head of the Certification Body

AP/CERTNORD 10.98

This certificate may only be reproduced without any change, schedule included.
Excerpts or changes shall be allowed by the TÜV Hannover/Sachsen-Anhalt e.V.

(13) **SCHEDULE**

(14) **EC-TYPE EXAMINATION CERTIFICATE N° TÜV 00 ATEX 1602**

(15) Description of equipment or protective system

The SPD Sensor Interface type NM2-SPD.-... is the part of the NoMix 2000 system that is responsible for the Sealed Parcel Delivery function.
The device meets the requirements of category 2 and may be used in potentially explosive areas of zone 1 resp. 2.
The non intrinsically safe compounds and assemblies are in the type of protection encapsulation "m" and the terminal box is in the typed of protection increased safety "e". The internal intrinsically safe supply EEx ia is realized by an associated apparatus in the encapsulation.

The permissible ambient temperature range is –20°C to 60°C.

Electrical data

Supply circuit, external..... (terminal 1 and 2)	Nominal voltage 24 V d.c., 15 V to 30 V d.c. $P \leq 30$ W from internal installed battery of the associated tank truck
CAN bus circuit, internal..... (terminal 4 and 5)	$U \leq 24$ V $I \leq 1$ A
SPD sensor circuit ..... (terminal K1 ... K20)	in type of protection "Intrinsic Safety" EEx ia IIB maximum values: $U_o =$ 7,14 V $I_o =$ 41 mA $P_o =$ 73 mW characteristic line: linear max. permissible outer capacitance: $C_o =$ 260 µF max. permissible outer inductance: $L_o =$ 70 mH

The non intrinsically safe input circuits are safely galvanically separated from the intrinsically safe circuit up to a peak crest value of the nominal voltage of 60 V.

(16) Test documents are listed in the test report N° 00 PX 12800.

(17) Special condition for safe use

none

(18) Essential Health and Safety Requirements

no additional ones

Translation

1. SUPPLEMENT to

EC TYPE-EXAMINATION CERTIFICATE No. TÜV 00 ATEX 1602

of the company: F.A. Sening GmbH
Regentstraße 1
D-25474 Ellerbek

In the future, the SPD-Sensor Interface type NM2-SPD.-... may also be manufactured according to the test documents listed in the test report.

The electrical data and all other details apply unchanged for this supplement.

(16) Test documents are listed in the test report N° 00 PX 12801.

(17) Further special conditions for safe use

none

(18) Essential Health and Safety Requirements

no additional ones

TÜV Hannover/Sachsen-Anhalt e.V.
TÜV CERT-Zertifizierungsstelle
Am TÜV 1
D-30519 Hannover

Hanover, 2000-10-26

i. V.

Head of the
Certification Body

Translation

(1) # EC-TYPE EXAMINATION CERTIFICATE

(2) Equipment or Protective System intended for use in potentially explosive atmospheres - **Directive 94/9/EC**

(3) EC-Type Examination Certificate Number

TÜV 01 ATEX 1706

(4)	Equipment or Protective System:	TAG Interface type NM2-TAG-...
(5)	Manufacturer:	F.A. Sening GmbH
(6)	Address:	Regentstraße 1 D-25474 Ellerbek

(7) This equipment or protective system and any acceptable variation thereto is specified in the schedule to this certificate and the documents therein referred to.

(8) The TÜV Hannover/Sachsen-Anhalt e.V., TÜV Certification Body N° 0032 in accordance with Article 9 of the Council Directive 94/9/EC of March 23, 1994, certifies that this equipment or protective system has been found to comply with the Essential Health and Safety Requirements relating to the design and construction of equipment and protective systems intended for use in potentially explosive atmospheres given in Annex II to the Directive.

The examination and test results are recorded in confidential report N° 01 PX 13100.

(9) Compliance with the Essential Health and Safety Requirements has been assured by compliance with:

EN 50 014:1997 **EN 50 019:2000** **EN 50 020:1994** **EN 50 028:1987**

(10) If the sign "X" is placed after the certification number, it indicates that the equipment or protective system is subject to special conditions for safe use specified in the schedule to this certificate.

(11) This EC-TYPE EXAMINATION CERTIFICATE relates only to the design and construction of the specified equipment or protective system. If applicable, further requirements of this Directive apply to the manufacture and supply of this equipment or protective system.

(12) The marking of the equipment or protective system shall include the following:

Ex II 2 G EEx m ia [ia] e IIB T4

TÜV Hannover/Sachsen-Anhalt e.V.
TÜV CERT-Zertifizierungsstelle
Am TÜV 1
D-30519 Hannover

i. V.

Head of the Certification Body

Hannover, 2001-07-09

10/014d TÜV Nord o. DAR 5.97

This certificate may only be reproduced without any change, schedule included. Excerpts or changes shall be allowed by the TÜV Hannover/Sachsen-Anhalt e.V.

(13) **SCHEDULE**

(14) **EC-TYPE EXAMINATION CERTIFICATE N° TÜV 01 ATEX 1706**

(15) Description of equipment or protective system

The TAG Interface type NM2-TAG.-... is part of the NoMix 2000 system and is used for the evaluation of TAG sensors which detect the product quality during the filling and unloading.
The device meets the requirements of category 2.
The non intrinsically safe compounds and assemblies are in the type of protection encapsulation "m" and the terminal box is in the typed of protection increased safety "e". The internal intrinsically safe supply EEx ia is realized by an associated apparatus in the encapsulation.

The permissible ambient temperature range is –20°C to 60°C.

Electrical data

Supply circuit, external..... (terminal 1 and 2)	Nominal voltage 24 V d.c., 15 V to 30 V d.c. P ≤ 30 W from internal installed battery of the associated tank truck
CAN bus circuit, internal..... (terminal 3 and 4)	U ≤ 24 V I ≤ 1 A
TAG sensor circuits..... (terminal K1 ... K6)	in type of protection "Intrinsic Safety" EEx ia IIB Maximum values: U_o = 14,7 V I_o = 298 mA P_o = 1,1 mW characteristic line: linear max. permissible outer capacitance: C_o = 3,86 µF max. permissible outer inductance: L_o = 1,8 mH

The non intrinsically safe input circuits are safely galvanically separated from the intrinsically safe circuits up to a peak crest value of the nominal voltage of 60 V. The intrinsically safe circuits are galvanically connected.

(16) Test documents are listed in the test report N° 01 PX 13100.

(17) Special condition for safe use

none

(18) Essential Health and Safety Requirements

no additional ones

Translation

1. SUPPLEMENT to

EC TYPE-EXAMINATION CERTIFICATE No. TÜV 01 ATEX 1706

of the company: F.A. Sening GmbH
Regentstraße 1
D-25474 Ellerbek

In the future, the TAG Interface type NM2-TAG-...may also be manufactured according to the test documents listed in the test report.
The amendments concern the internal design.

The electrical data and all other details apply unchanged for this supplement.

(16) Test documents are listed in the test report N° 02 YEX 184250b.

(17) Special conditions for safe use

none

(18) Essential Health and Safety Requirements

no additional ones

TÜV NORD CERT GmbH & Co. KG
TÜV CERT-Certification Body
Am TÜV 1
D-30519 Hannover
Tel.: 0511 986-1470
Fax: 0511 986-2555

Hannover, 2002-09-09

Head of the
Certification Body

Translation

(1) # EC-TYPE EXAMINATION CERTIFICATE

(2) Equipment or Protective System intended for use in potentially explosive atmospheres - **Directive 94/9/EC**

(3) EC-Type Examination Certificate Number

TÜV 01 ATEX 1707

(4)	Equipment or Protective System:	I/O Interface type NM2-I/O.-...
(5)	Manufacturer:	F.A. Sening GmbH
(6)	Address:	Regentstraße 1 D-25474 Ellerbek

(7) This equipment or protective system and any acceptable variation thereto is specified in the schedule to this certificate and the documents therein referred to.

(8) The TÜV Hannover/Sachsen-Anhalt e.V., TÜV Certification Body N° 0032 in accordance with Article 9 of the Council Directive 94/9/EC of March 23, 1994, certifies that this equipment or protective system has been found to comply with the Essential Health and Safety Requirements relating to the design and construction of equipment and protective systems intended for use in potentially explosive atmospheres given in Annex II to the Directive.

The examination and test results are recorded in confidential report N° 01 PX 13000.

(9) Compliance with the Essential Health and Safety Requirements has been assured by compliance with:

EN 50 014:1997 **EN 50 019:2000** **EN 50 020:1994** **EN 50 028:1987**

(10) If the sign "X" is placed after the certification number, it indicates that the equipment or protective system is subject to special conditions for safe use specified in the schedule to this certificate.

(11) This EC-TYPE EXAMINATION CERTIFICATE relates only to the design and construction of the specified equipment or protective system. If applicable, further requirements of this Directive apply to the manufacture and supply of this equipment or protective system.

(12) The marking of the equipment or protective system shall include the following:

II 2 G EEx m ib e IIB T4

TÜV Hannover/Sachsen-Anhalt e.V.
TÜV CERT-Zertifizierungsstelle
Am TÜV 1
D-30519 Hannover

i.V.

Head of the Certification Body

Hannover, 2000-07-09

10/014d TÜV Nord o. DAR 5.97

This certificate may only be reproduced without any change, schedule included. Excerpts or changes shall be allowed by the TÜV Hannover/Sachsen-Anhalt e.V.

(13) **SCHEDULE**

(14) EC-TYPE EXAMINATION CERTIFICATE N° TÜV 01 ATEX 1707

(15) Description of equipment or protective system

The I/O Interface type NM2-I/O.-... is part of the NoMix 2000 system and is used for the drive of magnetic valves.
The device meets the requirements of category 2.
The non intrinsically safe compounds and assemblies are in the type of protection encapsulation "m" and the terminal box is in the typed of protection increased safety "e". The internal intrinsically safe supply EEx ib is realized by an associated apparatus in the encapsulation.

The permissible ambient temperature range is –20°C to 60°C.

Electrical data

Supply circuit, external..... (terminal 1 and 2)	Nominal voltage 24 V d.c., 15 V to 30 V d.c. P ≤ 40 W from the internal installed battery of the associated tank truck
CAN bus circuit, internal..... (terminal 3 and 4)	U ≤ 24 V I ≤ 1 A
Output circuits..... (terminals 5 to 20)	U ≤ 24 V I ≤ 1 A
Input circuits..... (Klemme 21 to 24)	U ≤ 24 V I ≤ 1 A

(16) Test documents are listed in the test report N° 01 PX 13000.

(17) Special condition for safe use

none

(18) Essential Health and Safety Requirements

no additional ones

Translation

1. SUPPLEMENT to

EC TYPE-EXAMINATION CERTIFICATE No. TÜV 01 ATEX 1707

of the company: F.A. Sening GmbH
Regentstraße 1
D-25474 Ellerbek

In the future, the I/O Interface type NM2-I/O.-...may also be manufactured according to the test documents listed in the test report.

The amendments concern the internal design.

The electrical data and all other data apply unchanged for this supplement.

Test documents are listed in the test report N° 02 YEX 175480a.

TÜV NORD CERT GmbH & Co. KG
TÜV CERT-Certification Body
Am TÜV 1
D-30519 Hannover
Tel.: 0511 986-1470
Fax: 0511 986-2555

Hannover, 2002-05-29

Head of the
Certification Body

BA 02 03.02

(1) # EG-Baumusterprüfbescheinigung

(2) Geräte und Schutzsysteme zur bestimmungsgemäßen Verwendung in explosionsgefährdeten Bereichen - **Richtlinie 94/9/EG**

(3) EG Baumusterprüfbescheinigungsnummer

TÜV 02 ATEX 1981

(4) Gerät: Elektronischer Geber Typ TAG 1.-...

(5) Hersteller: F.A. Sening GmbH

(6) Anschrift: D-25474 Ellerbek, Regentstraße 1

(7) Die Bauart dieses Gerätes sowie die verschiedenen zulässigen Ausführungen sind in der Anlage zu dieser Baumusterprüfbescheinigung festgelegt.

(8) Die TÜV NORD CERT GmbH & Co. KG, TÜV CERT-Zertifizierungsstelle, bescheinigt als benannte Stelle Nr. 0032 nach Artikel 9 der Richtlinie des Rates der Europäischen Gemeinschaften vom 23. März 1994 (94/9/EG) die Erfüllung der grundlegenden Sicherheits- und Gesundheitsanforderungen für die Konzeption und den Bau von Geräten und Schutzsystemen zur bestimmungsgemäßen Verwendung in explosionsgefährdeten Bereichen gemäß Anhang II der Richtlinie.

Die Ergebnisse der Prüfung sind in dem vertraulichen Prüfbericht Nr. 02 YEX 550234 festgelegt.

(9) Die grundlegenden Sicherheits- und Gesundheitsanforderungen werden erfüllt durch Übereinstimmung mit

EN 50014:1997 **EN 50020:1994**

(10) Falls das Zeichen "X" hinter der Bescheinigungsnummer steht, wird auf besondere Bedingungen für die sichere Anwendung des Gerätes in der Anlage zu dieser Bescheinigung hingewiesen.

(11) Diese EG-Baumusterprüfbescheinigung bezieht sich nur auf Konzeption und Prüfung des festgelegten Gerätes gemäß Richtlinie 94/9/EG. Weitere Anforderungen dieser Richtlinie gelten für die Herstellung und das Inverkehrbringen dieses Gerätes. Diese Anforderungen werden nicht durch diese Bescheinigung abgedeckt.

(12) Die Kennzeichnung des Gerätes muss die folgenden Angaben enthalten:

II 2 G EEx ia IIB T4

TÜV NORD CERT GmbH & Co. KG
TÜV CERT-Zertifizierungsstelle
Am TÜV 1
D-30519 Hannover
Tel.: 0511 986-1470
Fax: 0511 986-2555

Hannover, 19.12.2002

Der Leiter

TÜV NORD CERT

Diese EG-Baumusterprüfbescheinigung darf nur unverändert weiterverbreitet werden.
Auszüge oder Änderungen bedürfen der Genehmigung der TÜV NORD CERT GmbH & Co. KG

(13) **ANLAGE**

(14) EG-Baumusterprüfbescheinigung Nr. TÜV 02 ATEX 1981

(15) Beschreibung des Gerätes

Der elektronische Geber Typ TAG 1.-... dient als Signalgeber z. B. an Erdtanks von Tankstellen. Der elektronische Geber sendet nach dem Anlegen einer eigensicheren Versorgungsspannung im Geber gespeicherte Informationen an eine zugehörige Auswerteelektronik auf dem Tankwagen. Der elektronische Geber wird als passiver Verbraucher im eigensicheren Stromkreis betrieben.

Technische Daten

Zulässiger Bereich der Umgebungstemperatur	- 20 °C bis 60 °C

Typ TAG 1.-...

TAG-Stromkreis (Anschlüsse L,+,-) in der Zündschutzart Eigensicherheit EEx ia IIB

nur zum Anschluss an einen bescheinigten eigensicheren Stromkreis mit folgenden Höchstwerten:

U_o = 15 V

I_o = 300 mA

P_o = 1,1 W

Die wirksame innere Kapazität beträgt: <= 600 nF

Die wirksame innere Induktivität ist vernachlässigbar klein

Typ TAG 1.-...

TAG-Stromkreis (Anschlüsse G,L,+,-) in der Zündschutzart Eigensicherheit EEx ia IIB

nur zum Anschluss an einen bescheinigten eigensicheren Stromkreis mit folgenden Höchstwerten:

U_o = 15 V

I_o = 300 mA

P_o = 1,1 W

Die wirksame innere Kapazität beträgt: <= 600 nF

Die wirksame innere Induktivität ist vernachlässigbar klein

Typ TAG 1 ESD.-...

TAG-Stromkreis (Anschlüsse G,L,+,-) in der Zündschutzart Eigensicherheit EEx ia IIB

nur zum Anschluss an einen bescheinigten eigensicheren Stromkreis mit folgenden Höchstwerten:

U_o = 15 V

I_o = 300 mA

P_o = 1,1 W

Die wirksame innere Kapazität beträgt: <= 100 nF

Die wirksame innere Induktivität ist vernachlässigbar klein

Typ TAG 1Z.-... bzw. Typ TAG 1.-...
mit vorgeschalteter Schutzschaltung
Typ 3Z.-....

TAG-Stromkreis(e) (Anschlüsse +,-) in der Zündschutzart Eigensicherheit EEx ia IIB

nur zum Anschluss an einen bescheinigten eigensicheren Stromkreis mit folgenden Höchstwerten:

U_o = 15 V

I_o = 400 mA

P_o = 1,475 W

Die wirksame innere Kapazität beträgt: <= 600 nF

Die wirksame innere Induktivität ist vernachlässigbar klein

Die Höchstwerte ergeben sich aus der Zusammenschaltung des TAG-Stromkreises des NOMIX-Steuergerätes und eines eigensicheren Stromkreises (z. B. Erdungstestgerätes) mit folgenden Höchstwerten

U_o = 15 V

I_o = 100 mA

P_o = 0,375 W

Typ TAG 1.-P....

TAG-Stromkreis (Anschlüsse 1,2,3,4) in der Zündschutzart Eigensicherheit EEx ia IIB

nur zum Anschluss an einen bescheinigten eigensicheren Stromkreis mit folgenden Höchstwerten:

U_o = 15 V

I_o = 300 mA

P_o = 1,1 W

Die wirksame innere Kapazität beträgt: <= 600 nF

Die wirksame innere Induktivität ist vernachlässigbar klein

(16) Prüfungsunterlagen sind im Prüfbericht Nr. 02 YEX 550234 aufgelistet.

(17) Besondere Bedingung

keine

(18) Grundlegende Sicherheits- und Gesundheitsanforderungen

keine zusätzlichen

(1) # EG-Baumusterprüfbescheinigung

(2) Geräte und Schutzsysteme zur bestimmungsgemäßen Verwendung in explosionsgefährdeten Bereichen - **Richtlinie 94/9/EG**

(3) EG Baumusterprüfbescheinigungsnummer

TÜV 02 ATEX 1982

(4) Gerät: Niveau-Sensor Typ S-NS-2.....

(5) Hersteller: F.A. Sening GmbH

(6) Anschrift: D-25474 Ellerbek, Regentstraße 1

(7) Die Bauart dieses Gerätes sowie die verschiedenen zulässigen Ausführungen sind in der Anlage zu dieser Baumusterprüfbescheinigung festgelegt.

(8) Die TÜV NORD CERT GmbH & Co. KG, TÜV CERT-Zertifizierungsstelle, bescheinigt als benannte Stelle Nr. 0032 nach Artikel 9 der Richtlinie des Rates der Europäischen Gemeinschaften vom 23. März 1994 (94/9/EG) die Erfüllung der grundlegenden Sicherheits- und Gesundheitsanforderungen für die Konzeption und den Bau von Geräten und Schutzsystemen zur bestimmungsgemäßen Verwendung in explosionsgefährdeten Bereichen gemäß Anhang II der Richtlinie.

Die Ergebnisse der Prüfung sind in dem vertraulichen Prüfbericht Nr. 02 YEX 550235 festgelegt.

(9) Die grundlegenden Sicherheits- und Gesundheitsanforderungen werden erfüllt durch Übereinstimmung mit

EN 50014:1997 **EN 50020:1994** **EN 50 284:1999** **ZH 1/10:1999**

(10) Falls das Zeichen "X" hinter der Bescheinigungsnummer steht, wird auf besondere Bedingungen für die sichere Anwendung des Gerätes in der Anlage zu dieser Bescheinigung hingewiesen.

(11) Diese EG-Baumusterprüfbescheinigung bezieht sich nur auf Konzeption und Prüfung des festgelegten Gerätes gemäß Richtlinie 94/9/EG. Weitere Anforderungen dieser Richtlinie gelten für die Herstellung und das Inverkehrbringen dieses Gerätes. Diese Anforderungen werden nicht durch diese Bescheinigung abgedeckt.

(12) Die Kennzeichnung des Gerätes muss die folgenden Angaben enthalten:

II 1 G EEx ia IIB T4

TÜV NORD CERT GmbH & Co. KG
TÜV CERT-Zertifizierungsstelle
Am TÜV 1
D-30519 Hannover
Tel.: 0511 986-1470
Fax: 0511 986-2555

Hannover, 19.12.2002

Der Leiter

TÜV NORD CERT

Diese EG-Baumusterprüfbescheinigung darf nur unverändert weiterverbreitet werden.
Auszüge oder Änderungen bedürfen der Genehmigung der TÜV NORD CERT GmbH & Co. KG

(13) **ANLAGE**

(14) EG-Baumusterprüfbescheinigung Nr. TÜV 02 ATEX 1982

(15) Beschreibung des Gerätes

Der Niveau-Sensor Typ S-NS-2..... dient als optoelektronische Einrichtung zur Feststellung von Restmengen in Tanks von Tankfahrzeugen.

Technische Daten

Zulässiger Bereich der Umgebungstemperatur	- 20 °C bis 60 °C
Versorgungs- und Signalstromkreis	in der Zündschutzart Eigensicherheit EEx ia IIB nur zum Anschluss an bescheinigte eigensicheren Stromkreise mit folgenden Höchstwerten: U_o = 7,5 V I_o = 45 mA P_o = 85 mW Die wirksame innere Induktivität und Kapazität sind vernachlässigbar klein.

(16) Prüfungsunterlagen sind im Prüfbericht Nr. 02 YEX 550235 aufgelistet.

(17) Besondere Bedingung

Keine;
die folgenden Bedingungen sind bei der Installation und beim Betrieb zu beachten:

Der Druck im Tank und der Temperaturbereich der Flüssigkeiten muss bei Anwendungen, die Kategorie-1-Betriebsmittel erfordern, zwischen 0.8 bar bis 1,1 bar und –20 °C bis 60 °C liegen.

Der Niveau-Sensor, der als Leermelder eingesetzt wird, darf nur lotgerecht an der Behälterunterseite angebracht werden.

Der Niveau-Sensor ist mit dem 1,5fachen max. möglichen Betriebsdruck auf Dichtheit zu prüfen.

Der Niveau-Sensor ist in die wiederkehrende Druckprüfung des Behälters mit einzubeziehen.

(18) Grundlegende Sicherheits- und Gesundheitsanforderungen

keine zusätzlichen

Physikalisch-Technische Bundesanstalt

Braunschweig und Berlin

(1) **KONFORMITÄTSBESCHEINIGUNG**

(2) **PTB Nr. Ex-00.E.2131**

(3) Diese Bescheinigung gilt für das elektrische Betriebsmittel

Überwachungssensor Typ INS 1..-...

(4) der Firma F.A. Sening GmbH
D-25470 Ellerbek

(5) Die Bauart dieses elektrischen Betriebsmittels sowie die verschiedenen zulässigen Ausführungen sind in der Anlage zu dieser Konformitätsbescheinigung festgelegt.

(6) Die Physikalisch-Technische Bundesanstalt bescheinigt als Prüfstelle nach Artikel 14 der Richtlinie des Rates der Europäischen Gemeinschaften vom 18. Dezember 1975 (76/117/EWG) die Übereinstimmung dieses elektrischen Betriebsmittels mit den harmonisierten Europäischen Normen

Elektrische Betriebsmittel für explosionsgefährdete Bereiche

EN 50014:1992 EN 50020:1994

nachdem das Betriebsmittel mit Erfolg einer Bauartprüfung unterzogen wurde. Die Ergebnisse dieser Bauartprüfung sind in einem vertraulichen Prüfprotokoll festgelegt.

(7) Das Betriebsmittel ist mit folgender Kennzeichnung zu versehen:

EEx ia IIC T4

(8) Der Hersteller ist dafür verantwortlich, daß jedes derart gekennzeichnete Betriebsmittel in seiner Bauart mit den in der Anlage zu dieser Bescheinigung aufgeführten Prüfungsunterlagen übereinstimmt und daß die vorgeschriebenen Stückprüfungen erfolgreich durchgeführt wurden.

(9) Das elektrische Betriebsmittel darf mit dem hier abgedruckten gemeinschaftlichen Unterscheidungszeichen gemäß Anhang II der Richtlinie des Rates vom 6. Februar 1979 (79/196/EWG) gekennzeichnet werden.

Im Auftrag

Dr.-Ing. Wehinger
Direktor und Professor

PHYSIKALISCH-TECHNISCHE BUNDESANSTALT 24

Braunschweig, 24. August 2000

Prüfbescheinigungen ohne Unterschrift und ohne Dienstsiegel haben keine Gültigkeit.
Die Bescheinigungen dürfen nur unverändert weiterverbreitet werden.
Auszüge oder Änderungen bedürfen der Genehmigung der Physikalisch-Technischen Bundesanstalt.

Physikalisch-Technische Bundesanstalt

ANLAGE

zur Konformitätsbescheinigung PTB Nr. Ex-00.E.2131

Der Überwachungssensor Typ INS 1..-... dient zur Kontrolle von metallischen Teilen z.B. Klappen, Ventilen, Hebeln und Schaltern im explosionsgefährdeten Bereich.

Der zulässige Umgebungstemperaturbereich beträgt –60 °C bis +85 °C.

Elektrische Daten

Versorgungs- und Signal-stromkreis	in Zündschutzart Eigensicherheit EEx ia IIC bzw. EEx ia IIB bzw. EEx ib IIC bzw. EEx ib IIB Nur zum Anschluß an einen bescheinigten eigensicheren Stromkreis. Höchstwerte: U_i = 16 V I_i = 76 mA P_i = 242 mW L_i = 50 µH C_i = 30 nF

Prüfungsunterlagen

	unterschrieben am
1. Beschreibung (3 Blatt)	2000-01-13
2. Zeichnung Nr. 44-Ex-001.0	2000-01-13
44-Ex-002.0	2000-01-13

Im Auftrag

Braunschweig, 24. August 2000

Dr.-Ing. Wehinger
Direktor und Professor

PHYSIKALISCH-TECHNISCHE BUNDESANSTALT 24

Z.14-755 320 17-09.93

The specifications contained herein are subject to change without notice and any user of said specifications should verify from the manufacturer that the specifications are currently in effect. Otherwise, the manufacturer assumes no responsibility for the use of specifications which may have been changed and are no longer in effect.

Contact information is subject to change. For the most current contact information, visit our website at www.fmctechnologies.com/measurementsolutions and click on the "Contact Us" link in the left-hand column.

Headquarters:
500 North Sam Houston Parkway West, Suite 100 Houston, TX 77067 USA, Phone: +1 (281) 260 2190, Fax: +1 (281) 260 2191

Measurement Products and Equipment:
Eri, PA USA +1 (814) 898 5000
Ellerbek, Germany +49 (4101) 3040
Barcelona, Spain +34 (93) 201 0989
Beijing, China +86 (10) 6500 2251
Buenos Aires, Argentina +54 (11) 4312 4736
Burnham, England +44 (1628) 603205
Dubai, United Arab Emirates +971 (4) 883 0303
Los Angeles, CA USA +1 (310) 328 1236
Melbourne, Australia +61 (3) 9807 2818
Moscow, Russia +7 (495) 5648705
Singapore +65 6861 3011
Thetford, England +44 (1842) 822900

Integrated Measurement Systems:
Corpus Christi, TX USA +1 (361) 289 3400
Kongsberg, Norway +47 (32) 28 67 00
San Juan, Puerto Rico +1 (787) 772 8100
Dubai, United Arab Emirates +971 (4) 883 0303

Visit our website at www.fmctechnologies.com/measurementsolutions

Printed in Germany © September 2003 F.A. Sening GmbH, Inc. All rights reserved. DOK-415E Issue/Rev. 1.20 (September 2003)